Available online at www.sciencedirect.com

ScienceDirect

Energy Procedia 42 (2013) 530 – 538

Energy Procedia

The Mediterranean Green Energy Forum 2013, MGEF-13

Development and Realization of an Intelligent Power Strip for Energy Consumption Management in Hybrid Wind/Photovoltaic Systems

RAFA Souad[a,*], KHENFRI Fouad[b], DIAF Said[a]

[a]*Centre de Développement des Energies Renouvlables, CDER, 16340, Algiers, Algeria*
[b]*ESTACA Campus Ouest, Laboratoire Systèmes Embarqués, 53061, Laval, France*

Abstract

The wind/photovoltaic hybrid systems play an important role in power generation, but the fickleness of the wind and light render the development of energy management algorithms in such systems necessary to ensure the stability and continuity of production. On the other hand, the power consumption has an effect on the management and storage of energy. In this paper, a power strip has been developed with a graphical user interface to help the researchers to develop and validate different energy management algorithms in a simple and efficient way. The power strip is installed and communicated with all components in the hybrid PV/Wind system and successfully manages consumption energy.

Keywords: Hybrid system; Energy cosumption mangement; Intelligent power strip.

1. Introduction

The global energy crises occasioned by the gradual increase in world population, climate change and the need for cleaner productions have generated much interest on renewable energy sources [1-3]. The need for renewable energy resources has taken centre stage in the quest for energy for domestic and industrial applications [3]. Wind and solar power are the most promising renewable power generation technologies [1, 3].

In recent years, hybrid PV/wind system has become viable alternatives to meet environmental protection requirement and electricity demands [4-6]. With the complementary characteristics between

* Corresponding author. Tel.: +213550247147; fax: +21321901654.
E-mail address: s.rafa@cder.dz.

doi:10.1016/j.egypro.2013.11.054

solar and wind energy resources for certain locations, a hybrid system with storage banks presents an unbeatable option for the supply of small electrical loads at remote locations where there is no utility grid power supply [4-6].

Due to the intermittent nature of wind and solar energy [4, 7-8], the management of consumption energy is necessary for using the energy resources more efficiently and economically.

In this paper, an intelligent power strip is developed for the consumption energy management. This electronic module is controlled by the micro-controller PIC18F4550 with a graphical user interface developed using MATLAB. This power strip is mounted in the hybrid PV/wind system and installed at the Center of Development of Renewable Energy (CDER). The module works perfectly in the system and allows the consummation of energy management produced by the system.

This paper is organized as follows:
Firstly, the structure of the hybrid PV/Wind system and the description of the intelligent power strip are presented. Secondly, the algorithm of energy consumption management by the power strip is shown. Finally, the graphical user interface is presented to control the power strip in real-time.

2. Structure of the hybrid PV/Wind system:

The power system is composed of: Wind generator (400 W) with a converter AC/DC and switch, PV generator (850 W) with a solar regulator and the battery bank (300 Ah) connected to an inverter. This inverter is connected to the power strip that feeds the AC loads. The wind and PV generators produce electricity, in accordance with the local wind and solar energy resources, to supply the loads; the battery bank forms the energy storage system that can supply the load when there is a lack of electricity, and store the surplus power when the power generated exceeds the load. Energy storage system is essential to cover the shortage of the renewable energy unpredictable and fluctuating nature.

To manage the consumption of the AC loads, the programmable power strip is realized, where we can program several scenarios for consumption. The hybrid PV/wind system is presented in the Fig.1.

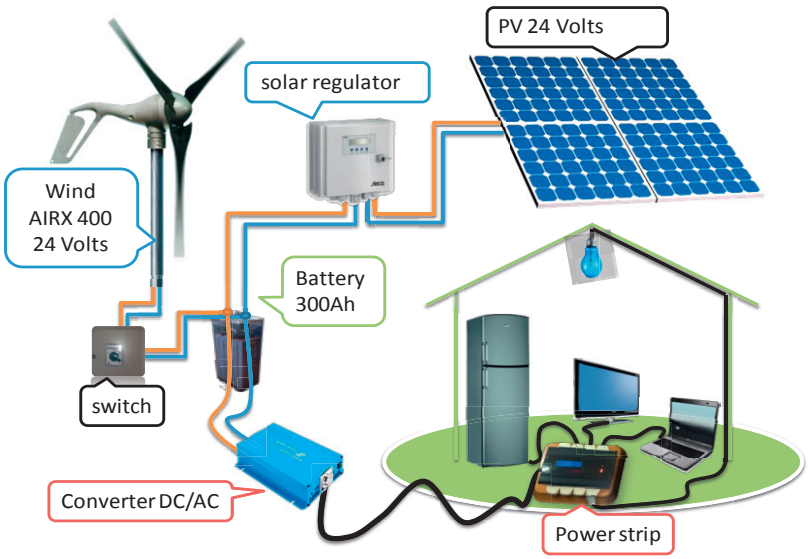

Fig. 1. The block diagram of PV / wind system.

This system is installed at the Center of Development of Renewable Energy (CDER).

Fig. 2. The hybrid (PV / wind) system.

3. Description of the intelligent power strip:

The production systems are inflexible and don't adapt to the variation of the load over time. It's important to note that the variation of the load due to: The increase or decrease in the population, the change in consumer behavior and seasonal changes in weather conditions.

Therefore, to adapt the systems of production to the consumption, the programmable power strip is realized. The principle of this device is to impose to the consumer to follow a load profile; this profile is defined according to the production and the weather conditions.

This programmable power strip was constructed with the relays and controlled by the PIC 18F4550 through a graphical user interface in MATLAB. This electronic module allows to control independently eight AC loads in real time. The block diagram of this module is shown in the Fig.3.

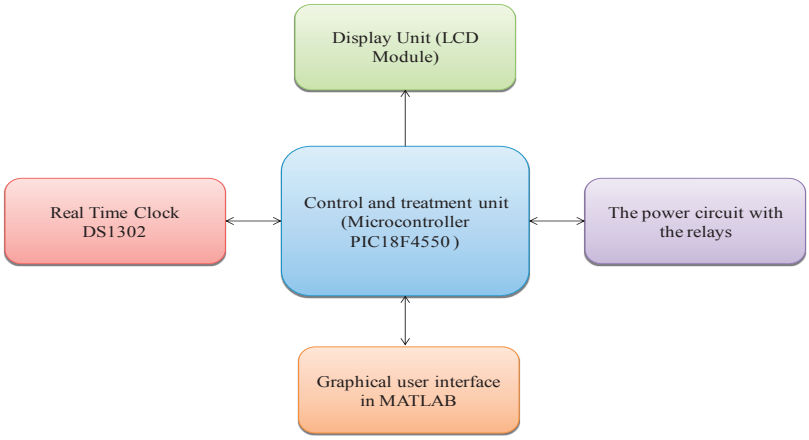

Fig. 3. The block diagram of the power strip.

The power strip is presented in the Fig.4.

Fig. 4. The intelligent power strip.

The power strip is composed of the power circuit and the control circuit. The control circuit (Fig.5) is constituted of 1) real time clock DS1320, this trickle-charge timekeeping chip contains a real-time clock/calendar and 31 bytes of static RAM. It communicates with a microprocessor via a simple serial interface. The real-time clock/calendar provides seconds, minutes, hours, day, date, month, and year information. The end of the month date is automatically adjusted for months with fewer than 31 days, including corrections for leap year. The clock operates in either the 24-hour or 12-hour format with an AM/PM indicator [9]. 2) An LCD displays the date, time and all instructions given by the micro-controller [10]. 3) The PIC 18F4550 that is the core of the power strip, controls the opening and closing of the relays. The power circuit (Fig.6) is composed of the relays (electrically operated switch).

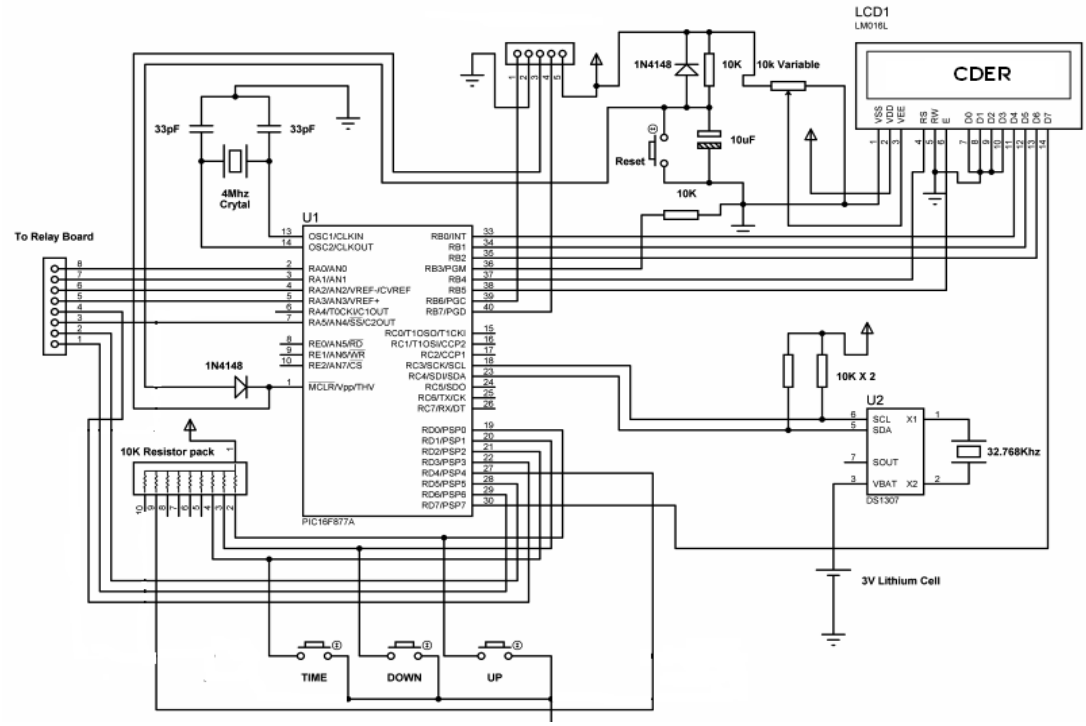

Fig. 5. The control circuit.

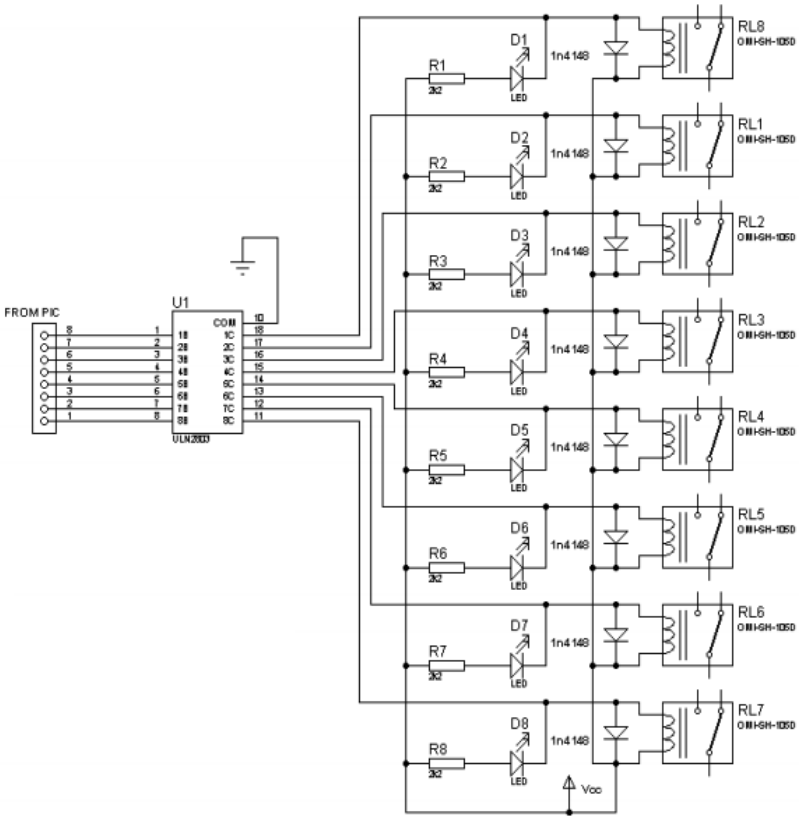

Fig. 6. The power circuit.

The two circuits are realized in CDER. (Fig. 7)

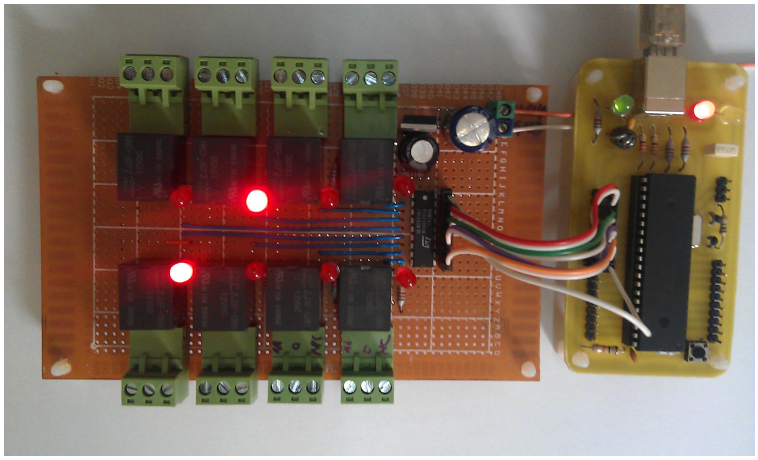

Fig. 7. The power and control circuits.

4. Energy consumption management by the power strip

The micro-controller USB is the main element in the system responsible for controlling the AC loads. The micro-controller used in this work is a PIC18F4550 of Microchip, because of its simplicity, its low price and its capacity to perform all the desired operations in the system [11]. In this micro-controller, the control is taken following the algorithm shown in Fig.9. The decision is then sent for controlling the relays for efficient consumption management of the energy produced. The micro-controller is programmed using C language and controlled through the USB by the MATLAB graphical user interface (Fig.8).

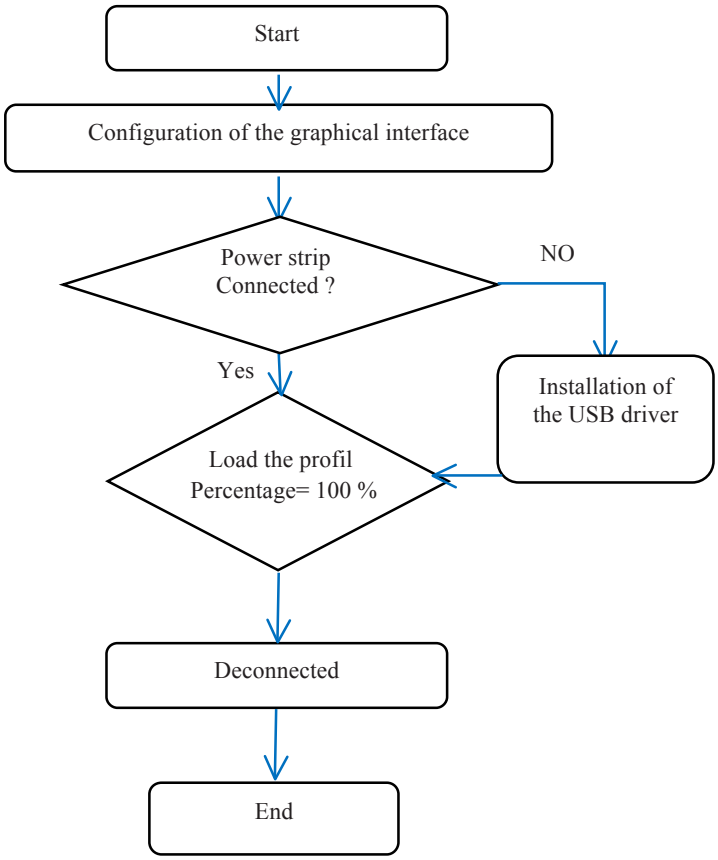

Fig. 8. The algorithm of power strip.

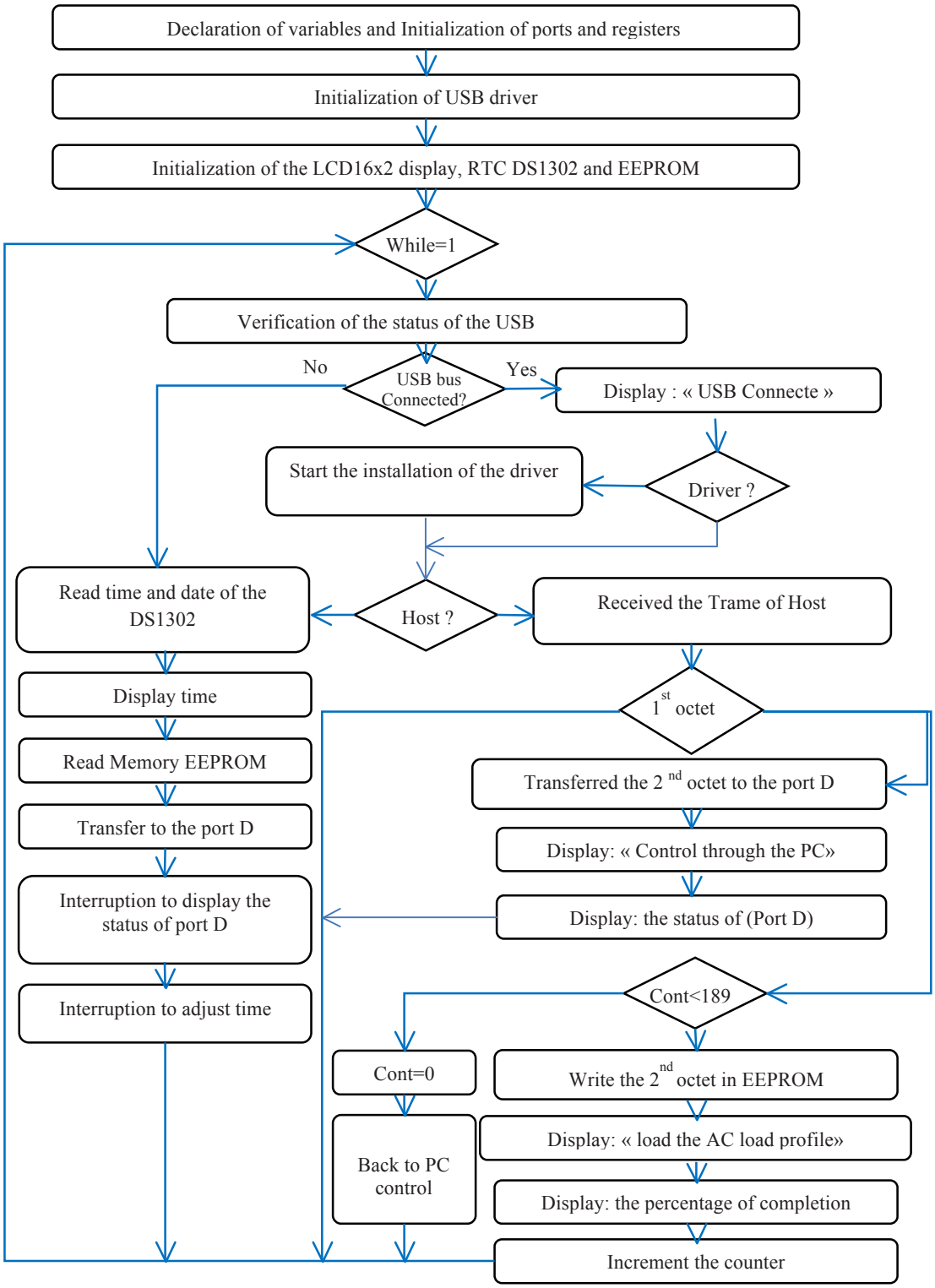

Fig. 9. The algorithm of Micro-controller.

5. Graphical user interface of the intelligent power strip:

The graphical user interface shown below is developed using MATLAB. This interface is used to create daily consumption profiles and to control the AC loads in real-time through a USB connected to the control circuit [12].

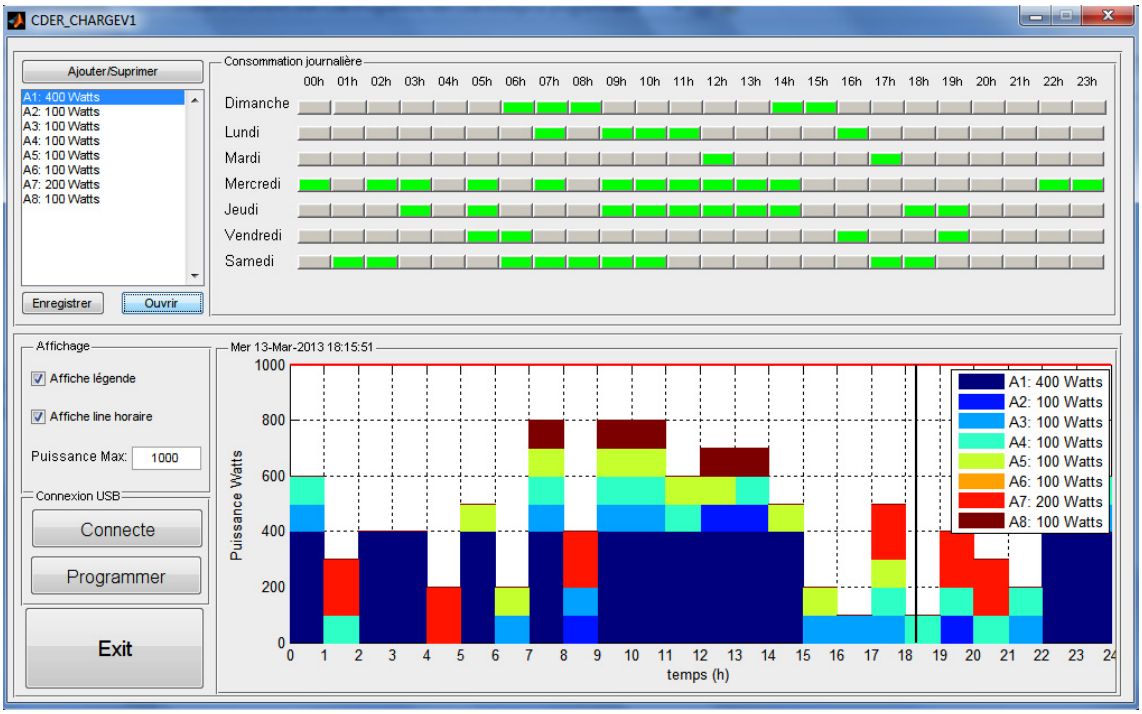

Fig. 10. The graphical user interface.

This interface is used to add and remove the AC loads, to create the daily consumption profiles and to start and stop the acquisition through the USB.

6. Conclusion:

This paper presents an intelligent power strip for energy consumption management in the hybrid PV/wind system. This module is realized at the Center of Development of Renewable Energy (CDER) and tested with the hybrid system.

The main objective of the present work is to control the consumption of the hybrid system and to use this module for the application of different algorithms of the energy management.

This module is in operation since April 2012, it can be concluded that the power strip can satisfactory manage the consumption energy of the hybrid PV/Wind system.

References

[1] D. Amorndechaphon and all, Modified Grid-Connected CSI for Hybrid PV/Wind Power Generation System, International Journal of Photoenergy 2012;12:1-12.

[2] Caisheng Wang and all, Power Management of a Stand-Alone Wind/Photovoltaic/Fuel Cell Energy System, IEEE Transactions on Energy Conversion, 2008;23:957-967.

[3] Jing Li,Wei Wei, Ji Xiang, A Simple Sizing Algorithm for Stand-Alone PV/Wind/Battery Hybrid Microgrids, Energies 2012; 5:5307-5323

[4] S.Diaf, M. Belhamel, M. Haddadi, A. Louche, Technical and economic assessment of hybrid photovoltaic/wind system with battery storage in Corsica island, Energy Policy 2008;36:743-754.

[5] S.Diaf, D. Diaf, M. Belhamel, M. Haddadi, A. Louche, A methodology for optimal sizing of autonomous hybrid PV/wind system, Energy Policy 2007;35:5708-5718.

[6] Ghassan HALASA, Johnson A. ASUMADU, Wind-Solar Hybrid Electrical Power Production to Support National Grid: Case Study – Jordan, Energy and Power Engineering, 2009;72-80.

[7] Zamani. M.H., Riahy. G.H, Introducing a new method for optimal sizing of a hybrid (wind/PV/battery) system considering Instantaneous Wind Speed Variations, Energy for Sustainable Development, 2008;12: 27-33.

[8] Todd, R.W, Controls for small wind/solar/battery systems, Journal of Wind Engineering, 1987;11.

[9] Datasheet DS1302 Trickle-charge Timekeeping chip, semiconductor:www.maxim-ci.com.

[10] G. BERTHOME, L'afficheur LCD (Light Control Display). http://gilles.berthome.free.fr/02-Syntheses/E Conversion_electriques_physiques/Synthese_afficheur_LCD.pdf

[11] MICROCHIP. USB Softaware & Tools. Available: http://www.microchip.com.

[12] F. Khenfri, S. Rafa, S. Diaf, Un environnement matériel et logiciel sous MATLAB pour le contrôle de la charge et de la validation des algorithms de la gestion de l'énergie des systèmes hybrides, The 2nd International Seminar on New and Renewable Energies, Ghardaia, Algeria 2012.