Available online at www.sciencedirect.com

SciVerse ScienceDirect

Energy Procedia 9 (2011) 198 – 206

Energy Procedia

9th Eco-Energy and Materials Science and Engineering Symposium

Energy Management and Control System for Smart Renewable Energy Remote Power Generation

Sompol Kohsri and Boonyang Plangklang*

Department of Electrical Engineering, Faculty of Engineering,
Rajamangala University of Technology Thanyaburi, Klong 6, Thanyaburi, Pathumthani 12110, Thailand
E-mail:pboonyang@gmail.com

Abstract

This paper presents the application energy management system and control system for smart renewable energy power generation. The development of communication platform is use LAB-View technology as a basis design for overall system. The proposed prototype is construct PV 1.8 kWp, Battery 18 kWh, 5 kW Generator. The main central control system will acquire data from the remote renewable energy system. All necessary monitor data are including power generation, load consumption, protection system, and other control parameters will be store at a control unit. All monitoring data are monitored as real-time data therefore the operator can also evaluate the system situation in the current states and make decisions to take an immediate action if needed. The system can be improved by learning from monitored data recorded. Moreover the system itself can forecast and make a decision for future power analysis.

Selection and/or peer-review under responsibility of CEO of Sustainable Energy System,
Rajamangala University of Technology Thanyaburi (RMUTT).

Keywords: Energy Management System, Smart Renewable Energy power Generation

1. INTRODUCTION

Energy is considered as an important mechanism in a country for the development, but in the current situation, the energy consumption is insufficient and the price is increasing. All these reasons directly effect the progressive development of Thailand. Therefore renewable energy sources are imperative to implement for future use. However renewable energy such as solar energy is not always in all day. In term of renewable energy sources as hybrid system, it is necessary to provide a stable power supply for whole day. This research develops a prototype PV-Battery-Diesel Hybrid System as shown in Fig. 1. A diesel

* *Corresponding author. Tel.: +66(2)549-3571, Fax +66(2)549-3422*
E-mail address: Pboonyang@hotmail.com

doi:10.1016/j.egypro.2011.09.021

generator use to supply power to the load directly. Solar panels and batteries are main power, there are control by Bi-directional inverter before connect to AC bus to supply the electrical load. During time the low demand, electricity are generate from PV is stored to the battery for using of night, the system can be sure to supply power 24 hours.

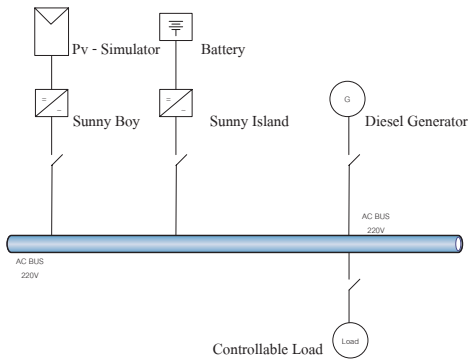

Fig. 1 integrated solar power systems [1].

The design system will focus to use of solar energy as a primary source, the primary source has to be enough to support the load. If the energy is not enough, the system will start the diesel generators automatically. The system will be recorded by real-time monitoring system.

2. PRINCIPLES OF SYSTEM DESIGN AND SIMULATION OF HYBRID POWER SYSTEMS.

The principle design of the system, there are design to cover the entire system and including to measure and record the results in central unit. The basis design is using daily consumption of the load at different time of day (Daily Load Profile). In this paper proposed loads for housing in rural areas using electrical appliances needed as Figure 2.

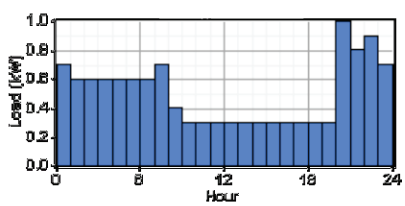

Fig. 2 Daily Load Profile.

To design the system, the size of the solar (P_{peak}) is calculated. There are some parameters to be considered as quality factor (Q) as in (1), the estimated theoretical (E_{th}) and carried out by (E_{el}) the energy from sunlight as Eqs. (2)-(3) therefore the equation for calculating the size solar cells the equation as Eq. (6) [2].

$$Q = \frac{E_{el}}{E_{th}} \quad (1)$$

$$E_{th} = \eta \cdot E_{glob} \cdot Aarray \quad (2)$$

$$P_{peak} = \eta \cdot I_{STC} \cdot Aarray \quad (3)$$

$$E_{th} = P_{peak} \times \frac{E_{glob}}{I_{STC}} \quad (4)$$

$$Q = \frac{E_{el}}{E_{glob} \times P_{peak}} \times I_{STC} \quad (5)$$

$$P_{peak} = \frac{E_{el} \times I_{STC}}{E_{glob} \times Q} \quad (6)$$

When

P_{peak} = size of the solar cells at standard STC (kWp)

E_{el} = energy required to load or equivalent per year (kWh / a) if the equivalent per day. Sun must be a day (kWh / d)

I_{STC} = standard solar radiation STC (1 kW/m^2)

E_{glob} = energy from the sun per year (kWh/m^{2}a) if a day is thought to be loaded per day (kWh/m^{2}d)

Q = power quality system

E_{th} = the power of the theory (kWh / a)

η = efficiency of solar panels (decimal)

Array = area of the PV (m^2).

From Eq. (6), the power can be determined the size of solar power as P_{peak} and the quality (Q) of the system in shown in Table 1.

Table 1. Quality factor of system [3].

Component/System	Q
PV module (Crystalline)	0.85…0.95
PV array	0.80…0.90
PV system (Grid-connected)	0.60…0.75
PV system (Stand-alone)	0.10…0.40
Hybrid system (PV/Diesel)	0.40…0.60

From Eq. (6), then the P_{peak} is calculated. The battery can be calculated as following by the rules of Schmid's Formula by Eq. (7).

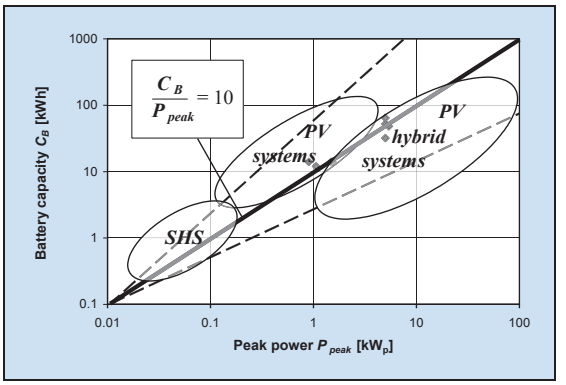

Fig. 3. The relationship between the capacity of the battery and maximum power of PV [3].

$$CB = 10 \times P_{peak} \quad (7)$$

When

CB = Capacity of the battery [kWh]

P_{peak} = Maximum power of the region PV [kWp]

This calculation will still be able to adapt and flexible with demonstrating, which can be flexible up to ± 20 %, depending on system design as a system as after calculating the values now. It is the value derived from the analysis by Simulation. Homer by the computer program to test a download of the energy from the sun through a database of program analysis location points on Homer by program the Google Map. The District of Rajamangalar University of Technology Thanyaburi was chosen to be the location of the simulation. The model on earth Simulation scenario is shown in Fig. 4 [4].

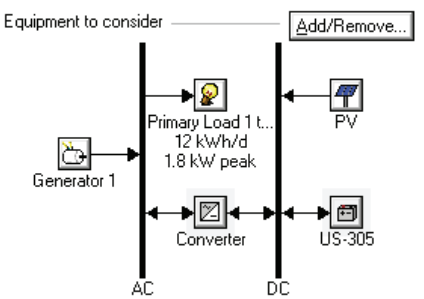

Fig. 4. Using the simulation program of Homer.

The design and evaluation of the program system optimum at PV 1.8 kWP is shown in Fig. 4. Diesel Generator Size 2 kW, Battery capacity = 18.3 kWh from the simulation system design that the system can load the continuity, and there is no blackout period. The image can be shown that the actual load (see Fig. 5).

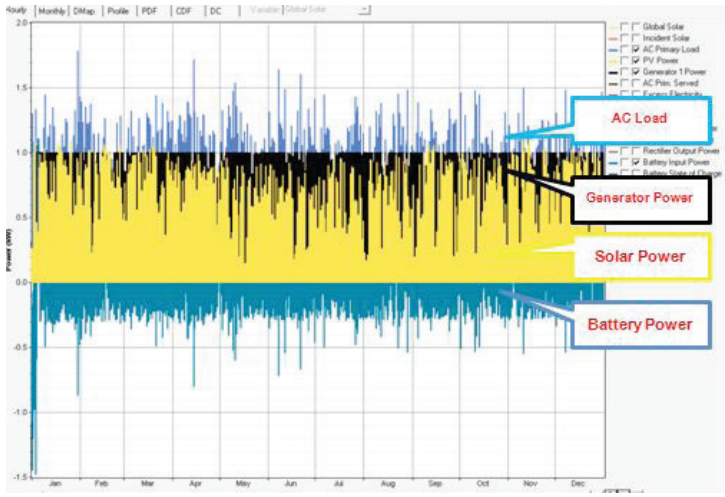

Fig. 5. Simulation results of system design.

Figure 5 shows the simulation of the system software that Homer can be seen during the day, there are daily load consumption(light blue), the energy of solar cells (yellow) is produced the power and supply to load. The rest energy is store at the battery (blue). During the night, solar can not enough power supply to load. Electrical energy at stored in the battery are not enough, the system will be start and use the energy from diesel generator (black). The system can supply power to load continuously.

3. DESIGN AND IMPLEMENT A SET OF ENERGY MANAGEMENT

The energy management for system is shown in Fig. 6.

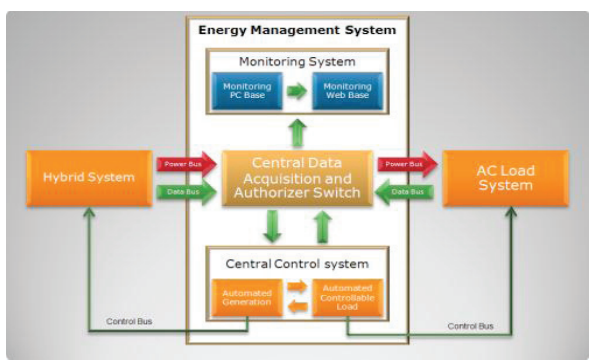

Fig. 6. Diagram of the Energy Management System.

From Fig. 6, the system record the energy consumption measure in real-time with a management system, while power users are likely to increase the burden of higher than normal power supply. The management suites will cut some of the load requires staying within the set**,** there are the priority of the device in advance, and tailor-made equipment in level of importance. Also you can modify other commands and control many details. The remain energy from the system enough to keep in batteries as show in Figure 7

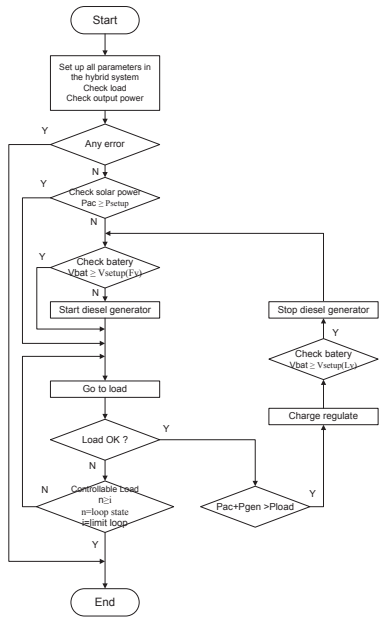

Fig. 7. Flow chart of operation of the system.

From the design and evaluation by programs, we can obtain the appropriate sizing of the system. Next step is to construct the Smart renewable energy remote power supply as show in Fig. 8.

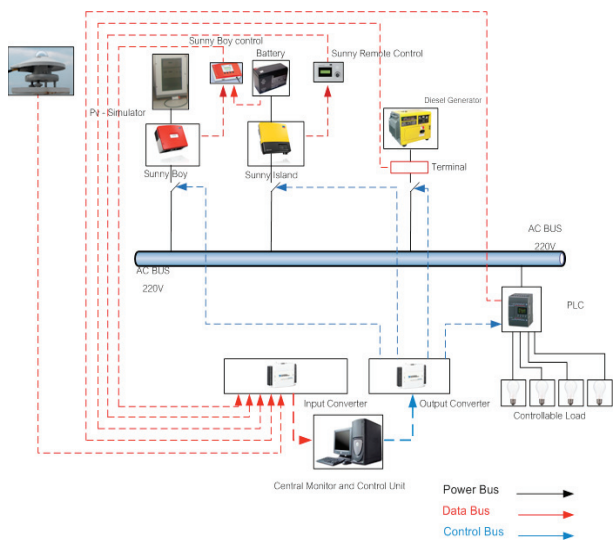

Fig. 8. A diagram of the hybrid power management system.

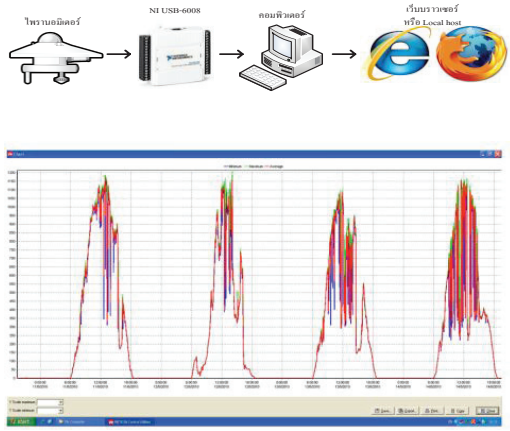

Fig. 9. Graphs the data from the solar sun sensors during 4 days of sample storage.

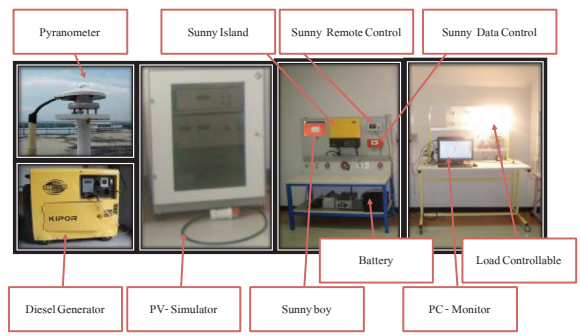

Fig. 10. Actual system installation.

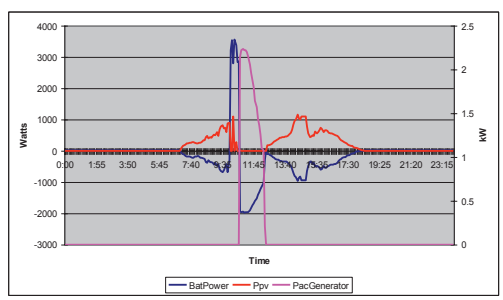

Fig. 11. Short time result of the system.

Figure 11 shows the monitored data of the system. In during clearly day the Solar cell use to supply to load and the night time or cloudy day is not to use solar cell power. There is no charge energy to the battery then it is zero and the system will be start to producing by solar cell electricity at the time approximately 7:05 pm, in during time day as show in the graph, there are energy produce from solar energy production, it has been charging the battery. The system can be use starting function and operating generator in during day at approximately 10:30 am until approximately 12:30 pm, that power are supply to load and stored to battery by solar energy. Until the battery power levels are lower than setup value in the battery state of Charge at 40% on by setting the control system, it is starting the generator to generate electric power supply to load and battery, that can be see power in this graph. Until the battery is fully charge over than setup value, the generator in system is stop working. But while the generator supplies to load by energy control system, the system will be cut off other parts. Issue is not bringing the energy supply from solar cells power combine with a diesel generator power.

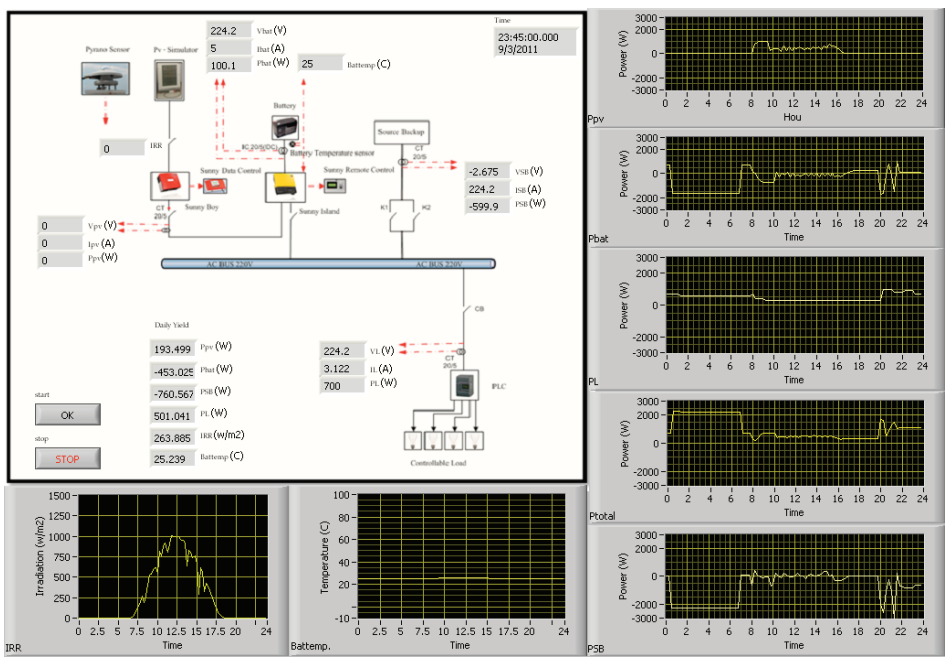

Fig. 12. Actual monitor system by Program LABView.

4. CONCLUSIONS

The principle of design is using a daily load profile in rural area. The calculation specified in system is by rules of Schmid's Formula. The simulation program is Homer Program to test the functionality and performance evaluation of the system which can be simulated that the designed system is working properly. The system consists of 1) PV Size 1.8 kWP, 2) Generator Size 2 kW, 3) Battery capacity size of 18.3 kWh. The monitoring system also known as real-time monitoring system is constructed by LabView. It can be accessed by computer. From the experiment, the system is working properly and stably as designed.

References

[1] Boonyang Plangklang, 2007, documentation of teaching Advance Topic in Electrical Engineering.

[2] Krisada Prom Observation, Boonyang Plangklang. 2008 "Design and analysis of integrated power system for home solar power," Conference on Electrical Engineering No. 31, Nakhon Nayok, 29-31 October 2008.

[3] J. Schmid, Photovoltaic systems Technology, teaching script, IEE-RE, University of Kassel, Germany, 2002.

[4] Shane Duryea, Syed Islam, and William Lawrance, “A Batteries Management System for stand-alone Photovoltaic Energy System,” IEEE Industry Applications Magazine, pp.67-72, May/June, 2001.