Math 121 **Solutions** to Assignment 15 Volume and Surface Area Pauline Chow

There are 12 problems in this assignment. Step-by-step solutions are provided below. Be sure to note all the graphing utilities and websites for checking purpose.

1. $y = \cos x$, $y = 0$, $x = -\dfrac{\pi}{2}$, and $x = \dfrac{\pi}{2}$

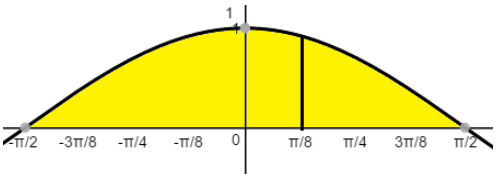

Since the cross-sections perpendicular to the x-axis are equilateral triangles, the length of the side of each equilateral triangle is the y-coordinate. Let us review the area of an equilateral triangle.

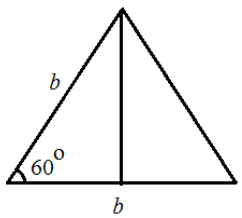

Area of a triangle

$$= \frac{1}{2}b^2 \sin 60^\circ$$

$$= \frac{1}{2}b^2 \frac{\sqrt{3}}{2}$$

$$= \frac{\sqrt{3}}{4}b^2$$

So, the area of each cross-section of the solid is $\dfrac{\sqrt{3}}{4}y^2$.

thickness = dx
limits are from $x = -\pi/2$ to $x = \pi/2$

$$V = \int_{-\pi/2}^{\pi/2} \frac{\sqrt{3}}{4} y^2 dx$$

$$= \int_{-\pi/2}^{\pi/2} \frac{\sqrt{3}}{4} \cos^2 x dx \qquad \text{Apply the double angle formula: } \cos^2 x = \frac{1+\cos 2x}{2}$$

$$= \int_{-\pi/2}^{\pi/2} \frac{\sqrt{3}}{4}\left(\frac{1+\cos 2x}{2}\right) dx \qquad \text{Simplify}$$

$$= \frac{\sqrt{3}}{8} \int_{-\pi/2}^{\pi/2} (1+\cos 2x) dx \qquad \text{Integrate}$$

$$= \frac{\sqrt{3}}{8}\left[x + \frac{1}{2}\sin 2x\right]_{-\pi/2}^{\pi/2} \qquad \text{Evaluate}$$

$$V = \frac{\sqrt{3}}{8}\left[\frac{\pi}{2} + \frac{1}{2}\sin\pi\right] - \frac{\sqrt{3}}{8}\left[-\frac{\pi}{2} + \frac{1}{2}\sin(-\pi)\right]$$

$$= \boxed{\frac{\sqrt{3}\pi}{8}} \approx \boxed{0.680}$$

Check using Casio:

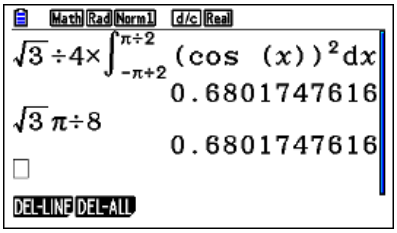

2. $y = \tan x$, $x = 0$, $x = \pi/3$, and $y = 0$; <u>about the x-axis</u> (disk method)

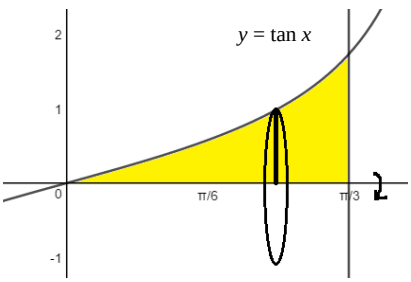

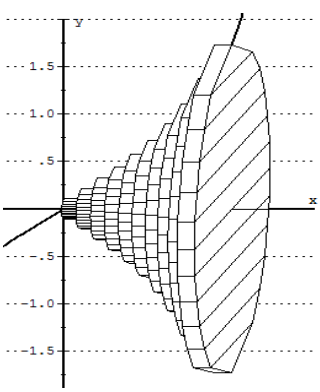

radius of revolution is the distance between the graph and the axis of revolution, x-axis
radius of revolution = y-coordinate
thickness = dx
limits are from $x = 0$ to $x = \pi/3$

$$V = \int_0^{\pi/3} \pi(\tan x)^2 dx \qquad \text{Apply the Pythagorean Identity: } 1 + \tan^2 x = \sec^2 x$$

$$= \pi\int_0^{\pi/3} \left(\sec^2 x - 1\right)dx \qquad \text{Integrate}$$

$$= \pi\left[\tan x - x\right]_0^{\pi/3} \qquad \text{Evaluate}$$

$$= \pi\left[\tan\frac{\pi}{3} - \frac{\pi}{3}\right] - \pi\left[\tan 0 - 0\right]$$

$$V = \boxed{\pi\left(\sqrt{3} - \frac{\pi}{3}\right)} \approx \boxed{2.152}$$

Check using Casio:

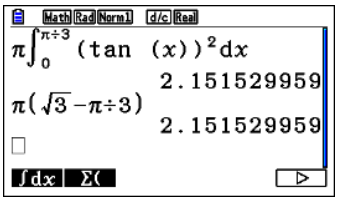

Note: Wolfram/Alpha has a beta version of widgets for disk/disc method. Click on the link and try:
http://www.wolframalpha.com/widgets/view.jsp?id=d2b9c7a8b489db02f0e60d70fcc00f74

3. $y = x^2 + 1$, $x = 0$, $x = 2$, and $y = 5$; about the x-axis (washer method)

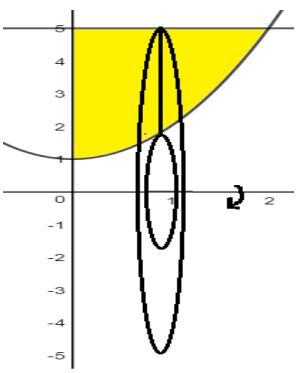

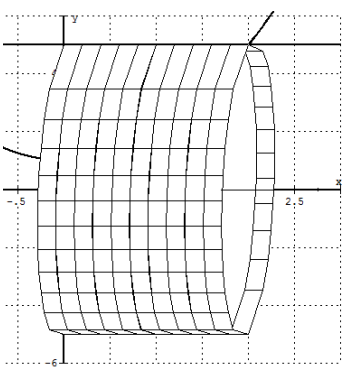

inner radius of revolution is the distance between the parabola and the axis of revolution, x-axis
inner radius of revolution = y-coordinate of the parabola
outer radius of revolution is the distance between the horizontal line, $y = 5$, and the axis of revolution, x-axis
outer radius of revolution = 5
thickness = dx
limits are from $x = 0$ to $x = 2$

$$V = \int_0^2 \pi\left(5^2 - (x^2+1)^2\right)dx \qquad \text{Foil the square}$$

$$= \int_0^2 \pi\left(25 - (x^4 + 2x^2 + 1)\right)dx \qquad \text{Distribute and simplify}$$

$$V = \pi\int_0^2 \left(24 - x^4 - 2x^2\right)dx \qquad \text{Integrate}$$

$$= \pi\left[24x - \frac{1}{5}x^5 - \frac{2}{3}x^3\right]_0^2 \qquad \text{Evaluate}$$

$$= \pi\left[48 - \frac{32}{5} - \frac{16}{3} - 0\right]$$

$$= \boxed{\frac{544}{15}\pi} \approx \boxed{113.935}$$

Check using TI:

```
fnInt(π(5²-(X²+1
)²),X,0,2)
        113.9350936
544π/15
        113.9350936
```

4. $y = 4 - x^2$, $x = 0$, $x = 2$, and $y = 0$; <u>about the y-axis</u>. (shell method)

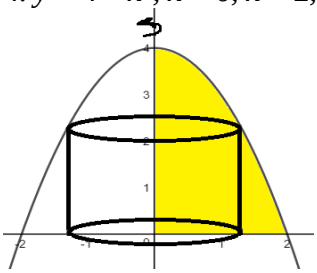

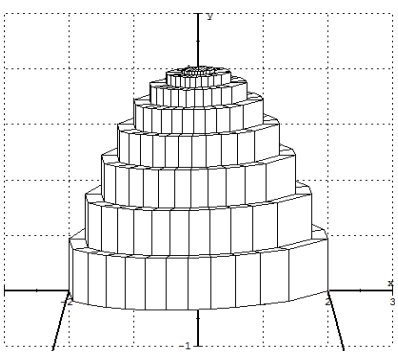

radius of revolution is the distance from the parabola to the axis of revolution, y-axis
radius of revolution = x-coordinate of the parabola
height of the revolution is the distance between the parabola and $y = 0$
height of revolution = y
thickness = dx
limits are from $x = 0$ to $x = 2$

$$V = \int_0^2 2\pi xy\,dx$$

$$= \int_0^2 2\pi x\left(4 - x^2\right)dx \qquad \text{Distribute}$$

$$V = 2\pi\int_0^2 \left(4x - x^3\right)dx \qquad \text{Integrate}$$

$$= 2\pi\left[2x^2 - \frac{1}{4}x^4\right]_0^2 \qquad \text{Evaluate}$$

$$= 2\pi\left[8 - 4 - 0\right]$$

$$= \boxed{8\pi} \approx \boxed{25.133}$$

Check using TI:

```
fnInt(2πX(4-X²),
X,0,2)
        25.13274123
8π
        25.13274123
```

Note: you can always use the following site to check the step-by-step solutions for integration:

http://www.emathhelp.net/calculators/calculus-2/definite-integral-calculator/

5. $x = y^{2/3}$ and $x = 4$; about $x = 4$ (disk method)

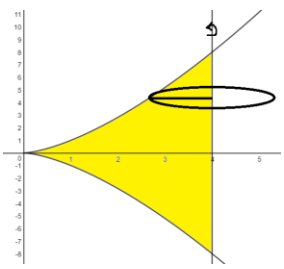

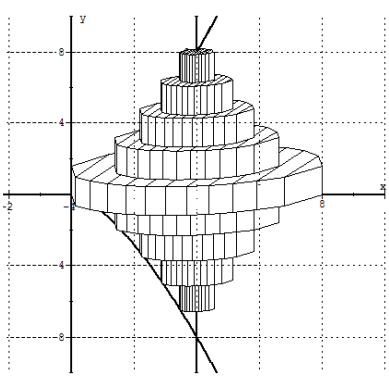

$x = 4$:

$$y^{2/3} = \sqrt[3]{y^2} = 4$$

$$y^2 = 4^3 = 64$$

$$y = \pm\sqrt{64} = \pm 8$$

radius of revolution is the distance between the parabola and the axis of revolution, $x = 4$
radius of revolution = 4 – x-coordinate of the graph
thickness = dy

limits are from $y = -8$ to $x = 8$

$$V = \int_{-8}^{8} \pi (4 - x)^2 \, dy \qquad \text{Symmetry}$$

$$= 2\pi \int_{0}^{8} \left(4 - y^{2/3}\right)^2 dy \qquad \text{Foil}$$

$$= 2\pi \int_{0}^{8} \left(16 - 8y^{2/3} + y^{4/3}\right) dy \qquad \text{Integrate}$$

$$= 2\pi \left[16y - \frac{24}{5} y^{5/3} + \frac{3}{7} y^{7/3} \right]_0^8 \qquad \text{Evaluate}$$

$$= 2\pi \left[16(8) - \frac{24}{5}(8)^{5/3} + \frac{3}{7}(8)^{7/3} \right] - 2\pi[0]$$

$$= 2\pi \left[128 - \frac{768}{5} + \frac{384}{7} \right]$$

$$= 2\pi \left[\frac{4480 - 5376 + 1920}{35} \right]$$

$$= \boxed{\frac{2048\pi}{35}} \approx \boxed{183.828}$$

Check using Casio:

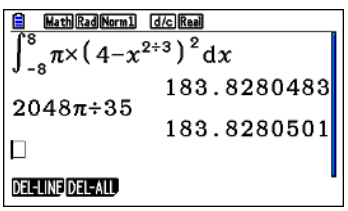

6. $y = \sin x$, $x = 0$, and $x = \pi$ about $y = -1$ (appropriate method)

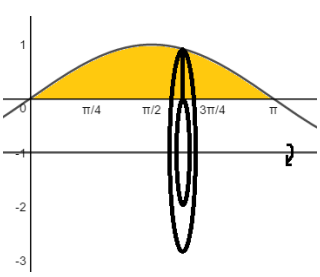

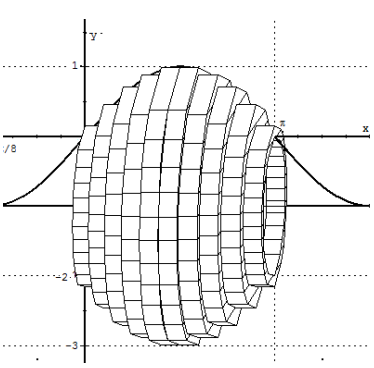

inner radius of revolution is the distance between x-axis and $y = -1$
inner radius of revolution = 1
outer radius of revolution is the distance between the sine graph and $y = -1$
outer radius of revolution = $y - (-1) = \sin x + 1$
thickness = dx
limits are from $x = 0$ to $x = \pi$

$$V = \int_0^{\pi} \pi\left[(1+\sin x)^2 - 1^2\right]dx \qquad \text{Foil}$$

$$= \pi\int_0^{\pi}\left[\left(1+2\sin x+\sin^2 x\right)-1\right]dx \qquad \text{Apply the double angle formula}$$

$$= \pi\int_0^{\pi}\left[2\sin x+\frac{1-\cos 2x}{2}\right]dx \qquad \text{Simplify}$$

$$= \pi\int_0^{\pi}\left(2\sin x+\frac{1}{2}-\frac{1}{2}\cos 2x\right)dx \qquad \text{Integrate}$$

$$= \pi\left[-2\cos x+\frac{1}{2}x-\frac{1}{4}\sin 2x\right]_0^{\pi} \qquad \text{Evaluate}$$

$$= \pi\left[-2\cos\pi+\frac{1}{2}\pi-\frac{1}{4}\sin 2\pi\right]-\pi\left[-2\cos 0+\frac{1}{2}0-\frac{1}{4}\sin 0\right]$$

$$= \pi\left(2+\frac{\pi}{2}+2\right)$$

$$= \boxed{\pi\left(4+\frac{\pi}{2}\right)} \approx \boxed{17.501}$$

Check using Casio:

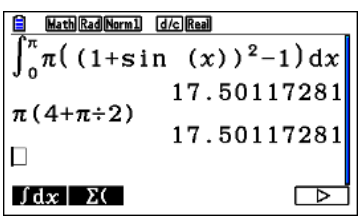

7. $y = x^2 + 1$, $x = -2$, $x = 2$, and $y = 5$; about $y = 5$ (disk method)

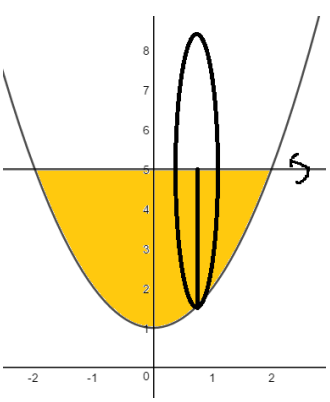

radius of revolution is the distance from the parabola to $y = 5$

radius of revolution = $5 - y = 5 - (x^2 + 1) = 4 - x^2$
thickness = dx
limits are from $x = -2$ to $x = 2$

$$V = \int_{-2}^{2} \pi\left(4 - x^2\right)^2 dx \qquad \text{Foil}$$

$$= 2\pi\int_{0}^{2}\left(16 - 8x^2 + x^4\right)dx \qquad \text{Symmetry and Integrate}$$

$$= 2\pi\left[16x - \frac{8}{3}x^3 + \frac{1}{5}x^5\right]_0^2 \qquad \text{Evaluate}$$

$$= 2\pi\left[32 - \frac{64}{3} + \frac{32}{5}\right] - 2\pi[0]$$

$$= \pi\left(\frac{480 - 320 + 96}{15}\right)$$

$$= \boxed{\frac{512\pi}{15}} \approx \boxed{107.233}$$

Check using TI:

```
fnInt(π(4-X²)²,X
,-2,2)
      107.2330292
512π/15
      107.2330292
```

8. $y = \frac{1}{6}x^3 + \frac{1}{2x}$, from $x = 1$ to $x = 2$

Find $\frac{dy}{dx}$ and $1 + \left(\frac{dy}{dx}\right)^2$ first.

$$\frac{dy}{dx} = \frac{1}{6}\left(3x^2\right) - \frac{1}{2}x^{-2}$$

$$= \frac{1}{2}x^2 - \frac{1}{2x^2}$$

$$1 + \left(\frac{dy}{dx}\right)^2 = 1 + \left(\frac{1}{2}x^2 - \frac{1}{2x^2}\right)^2 \qquad \text{Foil}$$

$$= 1 + \frac{1}{4}x^4 - \frac{1}{2} + \frac{1}{4x^4} \qquad \text{Simplify}$$

$$= \frac{1}{4}x^4 + \frac{1}{2} + \frac{1}{4x^4} \qquad \text{Factor}$$

$$= \left(\frac{1}{2}x^2 + \frac{1}{2x^2}\right)^2$$

$$S=\int_1^2\sqrt{\left(\frac{1}{2}x^2+\frac{1}{2x^2}\right)^2}\,dx$$

$$=\int_1^2\left(\frac{1}{2}x^2+\frac{1}{2}x^{-2}\right)dx \qquad \text{Integrate}$$

$$=\left[\frac{1}{2}\frac{x^3}{3}-\frac{1}{2x}\right]_1^2 \qquad \text{Evaluate}$$

$$S=\left[\frac{8}{6}-\frac{1}{4}\right]-\left[\frac{1}{6}-\frac{1}{2}\right]$$

$$=\boxed{\frac{17}{12}}\approx\boxed{1.417}$$

Check using Casio:

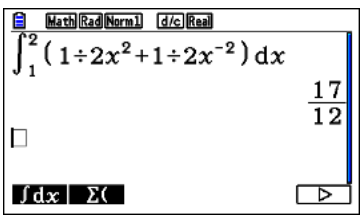

Note: There is a web-based tool to calculate the arc-length and show step-by-step at:

http://www.emathhelp.net/calculators/calculus-2/arc-length-calculus-calculator/

9. $x=\frac{4}{3}y^{3/2}$, from $y=0$ to $y=2$

Find $\frac{dy}{dx}$ and $1+\left(\frac{dy}{dx}\right)^2$ first.

$$\frac{dx}{dy}=\frac{4}{3}\left(\frac{3}{2}y^{1/2}\right)=2\sqrt{y}$$

$$1+\left(\frac{dx}{dy}\right)^2=1+\left(2\sqrt{y}\right)^2=1+4y$$

$$S=\int_0^2\sqrt{1+4y}\,dy \qquad \text{Apply Substitution Method}$$

$$u=1+4y, du=4dx, dx=\frac{du}{4}$$

$$y=2, u=9$$

$$y=0, u=1$$

$$S=\int_1^9\sqrt{u}\,\frac{du}{4} \qquad \text{Rewrite}$$

$$=\frac{1}{4}\int_1^9 u^{1/2}du \qquad \text{Integrate}$$

$$S = \frac{1}{4}\left[\frac{2}{3}u^{3/2}\right]_1^9 \quad \text{Evaluate}$$

$$= \frac{1}{4}\left[\frac{2}{3}(9)^{3/2}\right] - \frac{1}{4}\left[\frac{2}{3}(1)^{3/2}\right]$$

$$= \left[\frac{27}{6} - \frac{1}{6}\right]$$

$$= \boxed{\frac{13}{3}} \approx \boxed{4.333}$$

Check using TI:

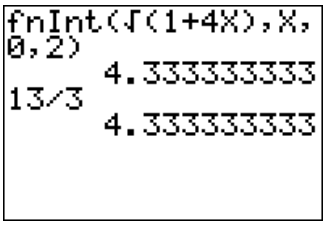

Note: There is a web-based tool to calculate the arc-length and show step-by-step at:

http://www.emathhelp.net/calculators/calculus-2/arc-length-calculus-calculator/

10. $y = \sqrt{x}, \frac{3}{4} \le x \le \frac{15}{4}$; x-axis

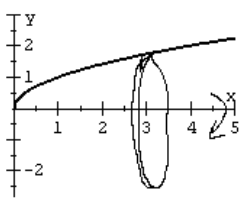

Radius of revolution is the distance between the function and the axis of revolution, x-axis
radius of revolution = y-coordinate of the parabola
thickness = dx
limits are from x = 3/4 to x = 15/4

Find $\frac{dy}{dx}$ and $1 + \left(\frac{dy}{dx}\right)^2$ first.

$$\frac{dy}{dx} = \frac{1}{2}x^{-1/2}$$

$$1 + \left(\frac{dy}{dx}\right)^2 = 1 + \left(\frac{1}{2}x^{-1/2}\right)^2$$

$$= 1 + \frac{1}{4}x^{-1}$$

$$= 1 + \frac{1}{4x}$$

$$A = \int_{3/4}^{15/4} 2\pi y \sqrt{1 + \frac{1}{4x}} dx$$

$$= 2\pi \int_{3/4}^{15/4} \sqrt{x} \frac{\sqrt{4x+1}}{\sqrt{4x}} dx$$

$$A = \pi \int_{3/4}^{15/4} \sqrt{4x+1} dx$$ Apply Substitution method

$$u = 4x + 1, du = 4dx$$

$$dx = \frac{du}{4}$$

$$x = \frac{15}{4}, u = 16$$

$$x = \frac{3}{4}, u = 4$$

$$A = \pi \int_{4}^{16} u^{1/2} \frac{du}{4}$$

$$= \frac{\pi}{4} \left[\frac{2}{3} u^{3/2} \right]_{4}^{16}$$

$$= \frac{\pi}{4} \left[\frac{2}{3} (16)^{3/2} \right] - \frac{\pi}{4} \left[\frac{2}{3} (4)^{3/2} \right]$$

$$= \frac{\pi}{2} \left(\frac{128}{3} - \frac{16}{3} \right)$$

$$= \boxed{\frac{28}{3}\pi} \approx \boxed{29.322}$$

Check using TI:

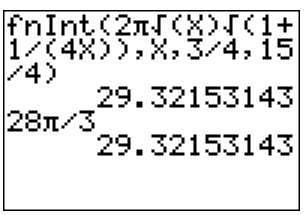

Note: There is a web-based tool to calculate the surface of revolution and show step-by-step at:

http://www.emathhelp.net/calculators/calculus-2/area-of-surface-of-revolution-calculator/

11. $x = \frac{1}{3} y^3, 0 \le y \le 1;$ y-axis

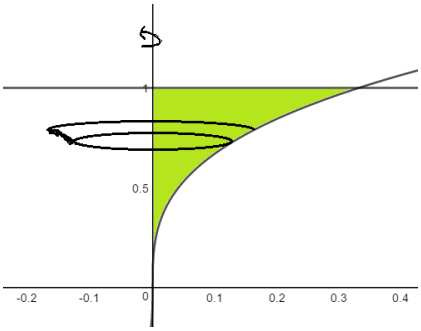

radius of revolution is the distance between the cubic function and the axis of revolution, *y*-axis
radius of revolution = *x*-coordinate of the cubic function
thickness = *dy*
limits are from *y* = 0 to *y* = 1

Find $\frac{dx}{dy}$ and $1+\left(\frac{dx}{dy}\right)^2$ first.

$$\frac{dx}{dy}=\frac{1}{3}\left(3y^2\right)=y^2$$

$$1+\left(\frac{dx}{dy}\right)^2=1+\left(y^2\right)^2=1+y^4$$

$$A=\int_0^1 2\pi x\sqrt{1+y^4}\,dy$$

$$=2\pi\int_0^1\frac{1}{3}y^3\sqrt{1+y^4}\,dy \qquad \text{Apply Substitution Method}$$

$$u=1+y^4, du=4y^3dy$$

$$dy=\frac{du}{4y^3}$$

$$x=1, u=2$$

$$x=0, u=1$$

$$A=\frac{2}{3}\pi\int_1^2 y^3\sqrt{u}\,\frac{du}{4y^3}$$

$$=\frac{\pi}{6}\int_1^2 u^{1/2}du$$

$$=\frac{\pi}{6}\left[\frac{2}{3}u^{3/2}\right]_1^2$$

$$=\frac{\pi}{9}\left[2^{3/2}-1\right]$$

$$=\boxed{\frac{\pi}{9}\left(2\sqrt{2}-1\right)}\approx\boxed{0.638}$$

Check using TI:

```
fnInt(2π/3X^3√(1
+X^4),X,0,1)
      .6382414692
π/9(2√(2)-1)
      .6382414692
```

Note: There is a web-based tool to calculate the area of surface of revolution and show step-by-step at:

http://www.emathhelp.net/calculators/calculus-2/area-of-surface-of-revolution-calculator/

12. $y = \frac{1}{6}x^3 + \frac{1}{2x}$, $1 \le x \le 2$; x-axis

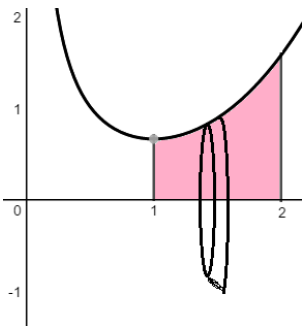

radius of revolution is the distance between the function and the axis of revolution, x-axis
radius of revolution = y-coordinate of the function
thickness = dx
limits are from $x = 1$ to $x = 2$

Find $\frac{dy}{dx}$ and $1 + \left(\frac{dy}{dx}\right)^2$ first.

$$\frac{dy}{dx} = \frac{1}{2}x^2 - \frac{1}{2}x^{-2}$$

$$1 + \left(\frac{dy}{dx}\right)^2 = 1 + \left(\frac{1}{2}x^2 - \frac{1}{2x^2}\right)^2$$

$$= 1 + \frac{1}{4}x^4 - \frac{1}{2} + \frac{1}{4x^4}$$

$$= \frac{1}{4}x^4 + \frac{1}{2} + \frac{1}{4x^4}$$

$$= \left(\frac{1}{2}x^2 + \frac{1}{2x^2}\right)^2$$

$$A=\int_1^2 2\pi y\sqrt{\left(\frac{1}{2}x^2+\frac{1}{2x^2}\right)^2}\,dy$$

$$=2\pi\int_1^2\left(\frac{1}{6}x^3+\frac{1}{2x}\right)\left(\frac{1}{2}x^2+\frac{1}{2x^2}\right)dx \qquad \text{Foil}$$

$$=2\pi\int_1^2\left(\frac{1}{12}x^5+\frac{1}{4}x+\frac{1}{12}x+\frac{1}{4x^3}\right)dx \qquad \text{Simplify}$$

$$=2\pi\int_1^2\left(\frac{1}{12}x^5+\frac{1}{3}x+\frac{1}{4}x^{-3}\right)dx \qquad \text{Integrate}$$

$$=2\pi\left[\frac{1}{72}x^6+\frac{1}{6}x^2-\frac{1}{8}x^{-2}\right]_1^2 \qquad \text{Evaluate}$$

$$=2\pi\left[\frac{64}{72}+\frac{4}{6}-\frac{1}{32}\right]-2\pi\left[\frac{1}{72}+\frac{1}{6}-\frac{1}{8}\right]$$

$$=\boxed{\frac{47\pi}{16}}\approx\boxed{9.228}$$

Check using TI:

```
fnInt(2π(1/6X^3+
1/(2X))(1/2X²+1/
(2X²)),X,1,2)
        9.22842842
47π/16
        9.22842842
```

Note: There is a web-based tool to calculate the area of surface of revolution and show step-by-step at:

http://www.emathhelp.net/calculators/calculus-2/area-of-surface-of-revolution-calculator/