MAN B&W 70-60 ME-GI/-C-GI-TII Type Engines

Engine Selection Guide

Electronically Controlled Two-stroke Engines

This book describes the general technical features of the ME/-GI Programme.

This Engine Selection Guide is intended as a 'tool' for assistance in the initial stages of a project.

The information is to be considered as **preliminary**. For further information see the Project Guide for the relevant engine type.

It should be noted that all figures, values, measurements or information about performance stated in this project guide are **for guidance only** and should not be used for detailed design purposes or as a substitute for specific drawings and instructions prepared for such purposes.

Data updates
Data not finally calculated at the time of issue is marked 'Available on request'. Such data may be made available at a later date, however, for a specific project the data can be requested. Pages and table entries marked 'Not applicable' represent an option, function or selection which is not valid.

The latest, most current version of the individual Project Guide sections are available on the Internet at: www.mandieselturbo.com under 'Products' → 'Marine Engines & Systems' → 'Low Speed'.

Extent of Delivery
As differences may appear in the individual suppliers' extent of delivery, please contact the relevant engine supplier for a confirmation of the actual execution and extent of delivery.

In order to facilitate negotiations between the yard, the engine maker and the customer, 'Extent of Delivery' forms are available in which the basic and the optional executions are specified.

Electronic versions
This Project Guide book and the 'Extent of Delivery' forms are available on a DVD and can also be found on the Internet at: www.mandieselturbo.com under 'Products' → 'Marine Engines & Systems' → 'Low Speed', where they can be downloaded.

1st Edition

June 2010

All data provided in this document is non-binding. This data serves informational purposes only and is especially not guaranteed in any way.

Depending on the subsequent specific individual projects, the relevant data may be subject to changes and will be assessed and determined individually for each project. This will depend on the particular characteristics of each individual project, especially specific site and operational conditions.

If this document is delivered in another language than English and doubts arise concerning the translation, the English text shall prevail.

MAN Diesel & Turbo
Teglholmsgade 41
DK-2450 Copenhagen SV
Denmark
Telephone +45 33 85 11 00
Telefax +45 33 85 10 30
mandiesel-cph@mandiesel.com
www.mandieselturbo.com

7010-0006-00ppr Jun 2010

Subject Section

C

D

E

Subject Section

E

Subject Section

J

L

M

Subject Section

M

N

O

P

Subject Section

S

T

Subject Section

T

U

V

W

X

Engine Design

1

ME-GI/ME-C-GI Dual Fuel Engine

The ME-GI/ME-C-GI engine is designed for the highly specialised LNG carrier market. The design builds on experience gained from the earlier MC-GI engines combined with the developments in the latest electronically controlled ME engines.

LNG carriers represent the last stand for the – in all other markets – practically extinct marine steam turbines. With efficiencies of only about 30%, versus the diesel engines' more than 50%, and in combined systems even higher, diesel engines are the propulsion system of choice in the marine industry.

This reason for the dominance of the diesel engines is clearly demonstrated in Fig. 1.00.01, showing the thermal efficiency of the various prime movers.

As shown, steam turbine propulsion plants generally have a lower efficiency and therefore need far more input energy than modern, fuel efficient diesel engines. With efficiency and CO_2 emission being largely inversely proportional, MAN Diesel is proposing alternative propulsion concepts based on low speed diesel engines with electronic control for modern LNG tankers.

Two different concepts are offered:
- ME HFO burning engines
- ME-GI/ME-C-GI dual fuel burning engines.

ME HFO

HFO burning fuel efficient Low Speed two-stroke diesel engines in single or twin propeller configuration, in combination with reliquefaction of the Boil Off Gas (BOG), offer economic benefits for those trades where loss, i.e. consumption of cargo, is not accepted and the supply of the full amount of cargo is honoured.

ME-GI/ME-C-GI

Where this is not the case, and gas fuel is preferred, the ME-GI/ME-C-GI dual fuel engine is the proper answer.

Recent technical development has made it possible for MAN Diesel to offer the option of dual fuel operation on ME-powered LNG carriers. The system focuses around a high pressure reciprocating compressor supplying the engine with the main gas injection, while ignition is ensured by fuel oil injection.

Ten years of operational experience have been logged with this concept.

However, LNG carriers are expensive ships, and the contractual supply of cargo is usually tied by strict charterparty conditions. Therefore, the market has been hesitant to look at and accept other than the traditional steam propulsion system.

Now this has changed. With the market launch of electronically controlled low speed diesels and reliable independent reliquefaction technology, all the traditional reasons not to leave the steam turbine have become invalid.

It must also be realised that manning of steam driven commercial vessels will be increasingly difficult because of the phasing out of marine steam turbines.

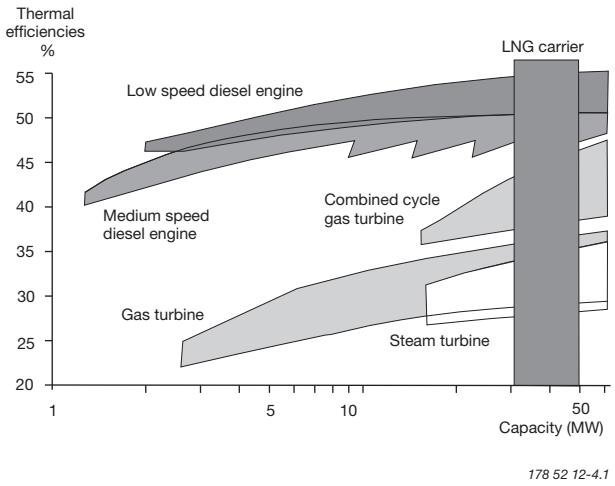

Fig. 1.00.01: Typical thermal efficiencies of prime movers

The ME Tier II Engine

The ever valid requirement of ship operators is to obtain the lowest total operational costs, and especially the lowest possible specific fuel oil consumption at any load, and under the prevailing operating conditions.

However, low-speed two-stroke main engines of the MC type, with a chain driven camshaft, have limited flexibility with regard to fuel injection and exhaust valve activation, which are the two most important factors in adjusting the engine to match the prevailing operating conditions.

A system with electronically controlled hydraulic activation provides the required flexibility, and such systems form the core of the ME 'Engine Control System', described later in detail in Chapter 16.

Concept of the ME engine

The ME engine concept consists of a hydraulic-mechanical system for activation of the fuel injection and the exhaust valves. The actuators are electronically controlled by a number of control units forming the complete Engine Control System.

MAN Diesel has specifically developed both the hardware and the software in-house, in order to obtain an integrated solution for the Engine Control System.

The fuel pressure booster consists of a simple plunger powered by a hydraulic piston activated by oil pressure. The oil pressure is controlled by an electronically controlled proportional valve.

The exhaust valve is opened hydraulically by means of a two-stage exhaust valve actuator activated by the control oil from an electronically controlled proportional valve. The exhaust valves are closed by the 'air spring'.

In the hydraulic system, the normal lube oil is used as the medium. It is filtered and pressurised by a Hydraulic Power Supply unit mounted on the engine or placed in the engine room.

The starting valves are opened pneumatically by electronically controlled 'On/Off' valves, which make it possible to dispense with the mechanically activated starting air distributor.

By electronic control of the above valves according to the measured instantaneous crankshaft position, the Engine Control System fully controls the combustion process.

System flexibility is obtained by means of different 'Engine running modes', which are selected either automatically, depending on the operating conditions, or manually by the operator to meet specific goals. The basic running mode is 'Fuel economy mode' to comply with IMO NOx emission limitation.

Engine design and IMO regulation compliance

The ME-C engine is the shorter, more compact version of the MC engine. It is well suited wherever a small engine room is requested, for instance in container vessels.

The ME-GI is a dual fuel engine burning natural gas, otherwise sharing the same compact design as the ME-C engine. It is designed for the highly specialised LNG carrier market.

For MAN B&W ME/ME-C/ME-GI-TII designated engines, the design and performance parameters have been upgraded and optimised to comply with the International Maritime Organisation (IMO) Tier II emission regulations.

The potential derating and part load SFOC figures for the Tier II engines have also been updated.

For engines built to comply with IMO Tier I emission regulations, please refer to the Marine Engine IMO Tier I Project Guide.

ME Advantages

The advantages of the ME range of engines are quite comprehensive, as seen below:

- Lower SFOC and better performance parameters thanks to variable electronically controlled timing of fuel injection and exhaust valves at any load
- Appropriate fuel injection pressure and rate shaping at any load
- Improved emission characteristics, with smokeless operation
- Easy change of operating mode during operation
- Simplicity of mechanical system with well-proven simple fuel injection technology familiar to any crew
- Control system with more precise timing, giving better engine balance with equalized thermal load in and between cylinders
- System comprising performance, adequate monitoring and diagnostics of engine for longer time between overhauls
- Lower rpm possible for manoeuvring
- Better acceleration, astern and crash stop performance
- Integrated Alpha Cylinder Lubricators
- Up-gradable to software development over the lifetime of the engine

It is a natural consequence of the above that more features and operating modes are feasible with our fully integrated control system and, as such, will be retrofittable and eventually offered to owners of ME engines.

Differences between MC/MC-C and ME/ME-C engines

The electro-hydraulic control mechanisms of the ME engine replace the following components of the conventional MC engine:

- Chain drive for camshaft
- Camshaft with fuel cams, exhaust cams and indicator cams
- Fuel pump actuating gear, including roller guides and reversing mechanism
- Conventional fuel pressure booster and VIT system
- Exhaust valve actuating gear and roller guides
- Engine driven starting air distributor
- Electronic governor with actuator
- Regulating shaft
- Engine side control console
- Mechanical cylinder lubricators.

The Engine Control System of the ME engine comprises:

- Control units
- Hydraulic power supply unit
- Hydraulic cylinder units, including:
  - Electronically controlled fuel injection, and
  - Electronically controlled exhaust valve activation
- Electronically controlled starting air valves
- Electronically controlled auxiliary blowers
- Integrated electronic governor functions
- Tacho system
- Electronically controlled Alpha lubricators

- Local Operating Panel (LOP)

- MAN Diesel PMI system, type PT/S off-line, cylinder pressure monitoring system.

The system can be further extended by optional systems, such as:

- Condition Monitoring System, CoCoS-EDS on-line

The main features of the ME engine are described on the following pages.

Engine Type Designation

6 S 70 M E -B/C 7 -GI -TII

- **TII** — Emission regulation
  - **TII** IMO Tier level
- **GI** — Fuel injection concept
  - (blank) Fuel oil only
  - **GI** Gas injection
- **7** — Mark version
- **B/C** — Design
  - **B** Exhaust valve controlled by camshaft
  - **C** Compact engine
- **E** — Concept
  - **E** Electronically controlled
  - **C** Camshaft controlled
- **M** — Engine programme
- **70** — Diameter of piston in cm
- **S** — Stroke/bore ratio
  - **S** Super long stroke
  - **L** Long stroke
  - **K** Short stroke
- **6** — Number of cylinders

Power, Speed, Dimensions

	Cyl.	L_1 kW
S70 ME-C8-GI Stroke: 2,800 mm	5	**16,350**
	6	**19,620**
	7	**22,890**
	8	**26,160**

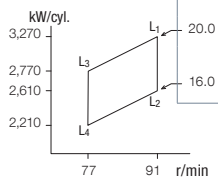

MEP bar	SFOC g/kWh MCR	SFOC g/kWh Minimum at Part Load
20.0	171	167
16.0	165	161

L_{min}:		5 cyl.	6 cyl.	7 cyl.	8 cyl.
Mark 8	mm	8,308	9,498	10,688	11,878
Dry mass:					
ME-C8-GI	t	451	534	605	681

Dimensions:		A	B	C	H_1	H_2	H_3
ME-C8-GI	mm	1,190	4,390	1,520	12,550	11,675	11,475

	Cyl.	L_1 kW
S60 ME-C8-GI Stroke: 2,400 mm	5	**11,900**
	6	**14,280**
	7	**16,660**
	8	**19,040**

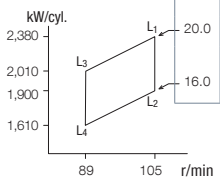

MEP bar	SFOC g/kWh MCR	SFOC g/kWh Minimum at Part Load
20.0	171	167
16.0	165	161

L_{min}:		5 cyl.	6 cyl.	7 cyl.	8 cyl.
Mark 8	mm	7,122	8,142	9,162	10,182
Dry mass:					
ME-C8-GI	t	321	366	414	463

Dimensions:		A	B	C	H_1	H_2	H_3
ME-C8-GI	mm	1,020	3,770	1,300	10,750	10,000	9,725

	Cyl.	L_1 kW
S65 ME-C8-GI Stroke: 2,730 mm	5	**14,350**
	6	**17,220**
	7	**20,090**
	8	**22,960**

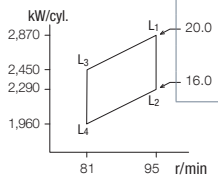

MEP bar	SFOC g/kWh MCR	SFOC g/kWh Minimum at Part Load
20.0	171	167
16.0	165	161

L_{min}:		5 cyl.	6 cyl.	7 cyl.	8 cyl.
Mark 8	mm	7,068	8,152	9,236	10,320
Dry mass:					
ME-C8-GI	t	382	451	512	575

Dimensions:		A	B	C	H_1	H_2	H_3
ME-C8-GI	mm	1,084	4,124	1,410	11,950	11,225	11,025

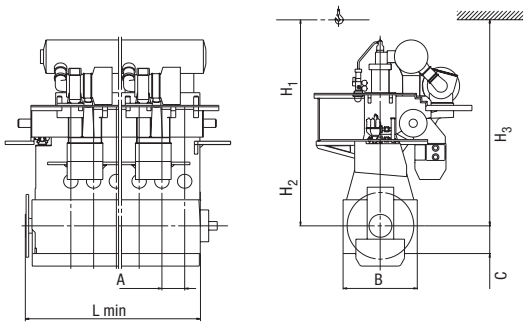

Engine Power Range and Fuel Oil Consumption

Engine Power

The following tables contain data regarding the power, speed and specific fuel oil consumption of the engine.

Engine power is specified in kW for each cylinder number and layout points L_1, L_2, L_3 and L_4:

For conversions between kW and metric horsepower, please note that 1 BHP = 75 kpm/s = 0.7355 kW.

L_1 designates nominal maximum continuous rating (nominal MCR), at 100% engine power and 100% engine speed.

L_2, L_3 and L_4 designate layout points at the other three corners of the layout area, chosen for easy reference.

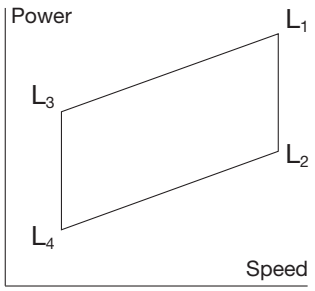

178 51 48-9.0

Fig. 1.04.01: Layout diagram for engine power and speed

Overload corresponds to 110% of the power at MCR, and may be permitted for a limited period of one hour every 12 hours.

The engine power figures given in the tables remain valid up to tropical conditions at sea level as stated in IACS M28 (1978), i.e.:

Blower inlet temperature ..... 45 °C
Blower inlet pressure ..... 1,000 mbar
Seawater temperature ..... 32 °C
Relative humidity 60%

Specific Fuel Oil Consumption (SFOC)

The figures given in this folder represent the values obtained when the engine and turbocharger are matched with a view to obtaining the lowest possible SFOC values while also fulfilling the IMO NOX Tier II emission limitations.

Stricter emission limits can be met on request, using proven technologies.

The SFOC figures are given in **g/kWh** with a tolerance of 5% and are based on the use of fuel with a lower calorific value of 42,700 kJ/kg (~10,200 kcal/
kg) at ISO conditions:
Ambient air pressure ..... 1,000 mbar
Ambient air temperature ..... 25 °C
Cooling water temperature ..... 25 °C

Specific fuel oil consumption varies with ambient conditions and fuel oil lower calorific value. For calculation of these changes, see Chapter 2.

Gas consumption

The energy consumption (heat rate) for the ME-GI engine is the same whether running on gas in dual fuel mode (heat rate in kJ/kWh) or fuel only mode.

This means that when a given amount of fuel oil is known in g/kWh, the additional gas consumption can be found by converting the energy supplied as gas into cubic metre per hour according to the LCV of the gas.

In the following sections, the energy consumption is calculated as equivalent fuel consumption, i.e. with all our usual figures.

Example:

SFOC ..... 170 g/kWh
ref. LCV ..... 42,700 kJ
Heat rate ..... 0.170 x 42,700 = 7,259 kJ/kWh

The heat rate is also referred to as the ‘Guiding Equivalent Energy Consumption’.

Lubricating oil data

The cylinder oil consumption figures stated in the tables are valid under normal conditions.

During running-in periods and under special conditions, feed rates can be increased. This is explained in Section 9.02.

Performance Curves

Updated engine and capacities data is available from the CEAS program on www.mandieselturbo.com under ‘Products’ → ‘Marine Engines & Systems’ → ‘Low Speed’ → ‘CEAS - Engine Room Dimensioning’.

ME-GI/ME-C-GI Engine Description

Please note that engines built by our licensees are in accordance with MAN Diesel drawings and standards but, in certain cases, some local standards may be applied; however, all spare parts are interchangeable with MAN Diesel designed parts.

Some components may differ from MAN Diesel's design because of local production facilities or the application of local standard components.

In the following, reference is made to the item numbers specified in the 'Extent of Delivery' (EoD) forms, both for the 'Basic' delivery extent and for some 'Options'.

Bedplate and Main Bearing

The bedplate is made with the thrust bearing in the aft end of the engine. The bedplate consists of high, welded, longitudinal girders and welded cross girders with cast steel bearing supports.

For fitting to the engine seating in the ship, long, elastic holding-down bolts, and hydraulic tightening tools are used.

The bedplate is made without taper for engines mounted on epoxy chocks.

The oil pan, which is made of steel plate and is welded to the bedplate, collects the return oil from the forced lubricating and cooling oil system. The oil outlets from the oil pan are normally vertical and are provided with gratings.

Horizontal outlets at both ends can be arranged for some cylinder numbers, however this must be confirmed by the engine builder.

The main bearings consist of thin walled steel shells lined with bearing metal. The main bearing bottom shell can be rotated out and in by means of special tools in combination with hydraulic tools for lifting the crankshaft. The shells are kept in position by a bearing cap.

Frame Box

The frame box is of welded design. On the exhaust side, it is provided with relief valves for each cylinder while, on the manoeuvring side, it is provided with a large hinged door for each cylinder. The crosshead guides are welded on to the frame box.

The frame box is attached to the bedplate with screws. The bedplate, frame box and cylinder frame are tightened together by stay bolts.

The hydraulic power supply are fitted on the aft end, and at the middle for engines with chain drive located in the middle, ie. large cylinder numbers. For engines with chain drive aft, the HPS is located at aft.

Cylinder Frame and Stuffing Box

The cylinder frame is cast, with the exception of the S65ME-C-GI which is welded, and is provided with access covers for cleaning the scavenge air space, if required, and for inspection of scavenge ports and piston rings from the manoeuvring side. Together with the cylinder liner it forms the scavenge air space.

The cylinder frame is fitted with pipes for the piston cooling oil inlet. The scavenge air receiver, turbocharger, air cooler box and gallery brackets are located on the cylinder frame. At the bottom of the cylinder frame there is a piston rod stuffing box, provided with sealing rings for scavenge air, and with oil scraper rings which prevent crankcase oil from coming up into the scavenge air space.

Drains from the scavenge air space and the piston rod stuffing box are located at the bottom of the cylinder frame.

Cylinder Liner

The cylinder liner is made of alloyed cast iron and is suspended in the cylinder frame with a low-situated flange. The top of the cylinder liner is fitted with a cooling jacket. The cylinder liner has scavenge ports and drilled holes for cylinder lubrication.

A piston cleaning ring is fitted at the top of the liner to prevent accumulation of deposits on the piston crown.

Cylinder Cover

The cylinder cover is of forged steel, made in one piece, and has bores for cooling water. It has a central bore for the exhaust valve, and bores for the fuel valves, gas valves, a starting valve and an indicator valve.

The cylinder cover is attached to the cylinder frame with studs and nuts tightened with hydraulic jacks.

In order to protect the gas injection nozzle and the fuel oil nozzle against tip burning, the cylinder cover is designed with a welded-on protective guard in front of the nozzles.

The side of the cylinder cover facing the HCU (Hydraulic Cylinder Unit) block has a face for the mounting of a special valve block, see later description.

In addition, the cylinder cover is provided with two sets of bores, one set for supplying gas from the valve block to each gas injection valve, and one set for leading any leakage of gas to the sub-atmospheric pressure, ventilated part of the double-wall piping system. The cylinder cover is also provided with holes for sensors (PMI on-line).

Crankshaft

The crankshaft is of the semi-built type, made from forged or cast steel throws. At the aft end, the crankshaft is provided with the collar for the thrust bearing, a flange for fitting the gear wheel for the step-up gear to the hydraulic power supply unit (if fitted on the engine), and the flange for the turning wheel and for the coupling bolts to an intermediate shaft.

At the front end, the crankshaft is fitted with the collar for the axial vibration damper and a flange for the fitting of a tuning wheel. The flange can also be used for a Power Take Off, if so desired.

Coupling bolts and nuts for joining the crankshaft together with the intermediate shaft are not normally supplied.

Thrust Bearing

The propeller thrust is transferred through the thrust collar, the segments, and the bedplate, to the end chocks and engine seating, and thus to the ship's hull.

The thrust bearing is located in the aft end of the engine. The thrust bearing is of the B&W-Michell type, and consists primarily of a thrust collar on the crankshaft, a bearing support, and segments of steel lined with white metal. The thrust shaft is an integrated part of the crankshaft and it is lubricated by the engine's lubricating oil system.

Step-up Gear

In case of engine driven HPS, the hydraulic oil pumps are mounted on the aft of the engine, and are driven from the crankshaft via step-up gear. The step-up gear is lubricated from the main engine system.

Turning Gear and Turning Wheel

The turning wheel is fitted to the thrust shaft, and it is driven by a pinion on the terminal shaft of the turning gear, which is mounted on the bedplate. The turning gear is driven by an electric motor with built-in gear with brake.

A blocking device prevents the main engine from starting when the turning gear is engaged. Engagement and disengagement of the turning gear is effected manually by an axial movement of the pinion.

The control device for the turning gear, consisting of starter and manual control box, can be ordered as an option.

Axial Vibration Damper

The engine is fitted with an axial vibration damper, mounted on the fore end of the crankshaft. The damper consists of a piston and a split-type housing located forward of the foremost main bearing. The piston is made as an integrated collar on the main journal, and the housing is fixed to the main bearing support.

Tuning Wheel/
Torsional Vibration Damper

A tuning wheel or torsional vibration damper may have to be ordered separately, depending on the final torsional vibration calculations.

Connecting Rod

The connecting rod is made of forged or cast steel and provided with bearing caps for the crosshead and crankpin bearings.

The crosshead and crankpin bearing caps are secured to the connecting rod with studs and nuts tightened by means of hydraulic jacks.

The crosshead bearing consists of a set of thin-walled steel shells, lined with bearing metal. The crosshead bearing cap is in one piece, with an angular cut-out for the piston rod.

The crankpin bearing is provided with thin-walled steel shells, lined with bearing metal. Lube oil is supplied through ducts in the crosshead and connecting rod.

Piston

The piston consists of a piston crown and piston skirt. The piston crown is made of heat-resistant steel and has four ring grooves which are hard-chrome plated on both the upper and lower surfaces of the grooves.

The uppermost piston ring is of the CPR type (Controlled Pressure Relief), whereas the other three piston rings are with an oblique cut. The uppermost piston ring is higher than the others. The piston skirt is of cast iron with a bronze band.

Piston Rod

The piston rod is of forged steel and is surface-hardened on the running surface for the stuffing box. The piston rod is connected to the crosshead with four screws. The piston rod has a central bore which, in conjunction with a cooling oil pipe, forms the inlet and outlet for cooling oil.

Crosshead

The crosshead is of forged steel and is provided with cast steel guide shoes with white metal on the running surface.

The telescopic pipe for oil inlet and the pipe for oil outlet are mounted on the guide shoes.

Scavenge Air System

The air intake to the turbocharger takes place directly from the engine room through the turbocharger intake silencer. From the turbocharger, the air is led via the charging air pipe, air cooler and scavenge air receiver to the scavenge ports of the cylinder liners, see Chapter 14.

Scavenge Air Cooler

For each turbocharger is fitted a scavenge air cooler of the mono-block type designed for seawater cooling at up to 2.0 - 2.5 bar working pressure, alternatively, a central cooling system can be chosen with freshwater of maximum 4.5 bar working pressure.

The scavenge air cooler is so designed that the difference between the scavenge air temperature and the water inlet temperature at specified MCR can be kept at about 12 °C.

Auxiliary Blower

The engine is provided with electrically-driven scavenge air blowers. The suction side of the blowers is connected to the scavenge air space after the air cooler.

Between the air cooler and the scavenge air receiver, non-return valves are fitted which automatically close when the auxiliary blowers supply the air.

The auxiliary blowers will start operating consecutively before the engine is started in order to ensure sufficient scavenge air pressure for a safe start.

Further information is given in Chapter 14.

Exhaust Turbocharger

The engines can be fitted with either MAN Diesel, ABB or Mitsubishi turbochargers.

The turbocharger choice is described in Chapter 3, and the exhaust gas system in Chapter 15.

Exhaust Gas Receiver

The exhaust gas receiver is designed to withstand the pressure in the event of ignition failure of one cylinder followed by ignition of the unburned gas in the receiver (around 15 bar).

The receiver is furthermore designed with special transverse stays to withstand such gas explosions.

Reversing

Reversing of the engine is performed electronically, by changing the timing of the fuel injection, the exhaust valve activation and the starting valves.

Hydraulic Cylinder Unit

The hydraulic cylinder unit (HCU), one per cylinder, consists of a support console on which a distributor block is mounted. The distributor block is fitted with a number of accumulators to ensure that the necessary hydraulic oil peak flow is available for the Electronic Fuel Injection.

The distributor block serves as a mechanical support for the hydraulically activated fuel pressure booster and the hydraulically activated exhaust valve actuator.

To reduce the number of additional hydraulic pipes and connections, the ELGI valve as well as the control oil pipe connections to the gas valves will be incorporated in the design of the HCU.

Fuel Oil Pressure Booster and Fuel Oil High Pressure Pipes

The engine is provided with one hydraulically activated fuel oil pressure booster for each cylinder.

Fuel injection is activated by a proportional valve, which is electronically controlled by the Cylinder Control Unit.

Further information is given in Section 7.01.

Gas Valve block

The valve block consists of a square steel block, bolted to the HCU side of the cylinder cover.

The valve block incorporates a large volume accumulator, and is provided with a shutdown valve and two purge valves. All high-pressure gas sealings lead into spaces that are connected to the double-wall pipe system, for leakage detection.

An ELGI valve and control oil supply are also incorporated in the gas valve block.

The gas is supplied to the accumulator via a non-return valve placed in the accumulator inlet cover.

To ensure that the rate of gas flow does not drop too much during the injection period, the relative pressure drop in the accumulator is measured. The pressure drop should not exceed approx. 20-30 bar.

Any larger pressure drop would indicate a severe leakage in the gas injection valve seats or a fractured gas pipe. The safety system will detect this and shut down the gas injection.

From the accumulator, the gas passes through a bore in the valve block to the shut down valve, which in the gas mode, is kept open by compressed air. From the shutdown valve (V4 in Fig. 7.00.01), the gas is led to the gas injection valve via bores in the valve block and in the cylinder cover. A blow-off valve (V3 in Fig. 7.00.01), placed on the valve block, is designed to empty the gas bores when needed.

A purge valve (V5 shown in Fig. 7.00.01), which is also placed on the valve block, is designed to empty the accumulator when the engine is no longer to operate in the gas mode.

Fuel Valves, Gas Valves and Starting Air Valve

The cylinder cover is equipped with two or three fuel oil valves, two or three gas valves, starting air valve, and indicator cock.

The opening of the fuel valves is controlled by the high pressure fuel oil created by the fuel oil pressure booster, and the valves are closed by a spring.

The opening of the gas valve is controlled by the ELGI valve, which operates on control oil taken from the system oil.

An automatic vent slide allows circulation of fuel oil through the valve and high pressure pipes when the engine is stopped. The vent slide also prevents the compression chamber from being filled up with fuel oil in the event that the valve spindle sticks. Oil from the vent slide and other drains is led away in a closed system.

The fuel oil high-pressure pipes are equipped with protective hoses and are neither heated nor insulated.

The mechanically driven starting air distributor used on the MC engines has been replaced by one solenoid valve per cylinder, controlled by the CCUs of the Engine Control System.

Slow turning before starting is a program incorporated into the basic Engine Control System.

The starting air system is described in detail in Section 13.01.

The starting valve is opened by control air and is closed by a spring. The integrated Engine Control System controls the starting valve timing.

Fuel injection valves

Dual fuel operation requires valves for both the injection of fuel oil (incl. pilot oil) and gas fuel.

The valves are of separate types, and two are fitted for gas injection and two for fuel oil. The media required for both fuel and gas operation is shown below:

- High-pressure gas supply
- Fuel oil supply (pilot oil)
- Control oil supply for activation of gas injection valves
- Sealing oil supply.

The gas injection valve design is shown in Fig. 1.06.01.

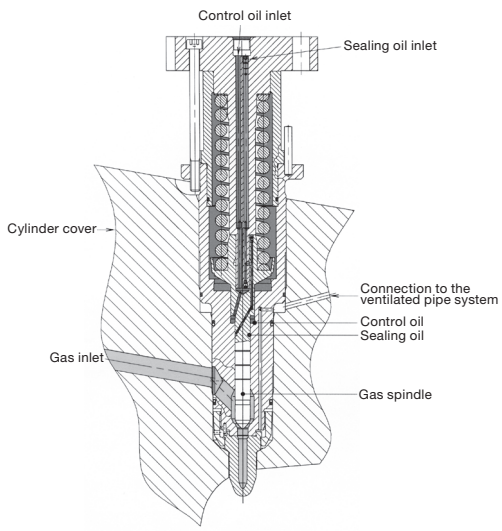

178 53 64-5.0

Fig. 1.06.01: Gas injection valve

This valve complies with our traditional design principles of compact design and the use of mainly rotational symmetrical parts. The design is based on the principle used for an early version of a combined fuel oil/gas injection valve as well as experience gained with our normal fuel valves.

Gas is admitted to the gas injection valve through bores in the cylinder cover. To prevent gas leakage between cylinder cover/gas injection valve and valve housing/spindle guide, sealing rings made of temperature and gas resistant material are installed. Any gas leakage through the gas sealing rings will be led through bores in the gas injection valve and the cylinder cover to the double-wall gas piping system, where any such leakages will be detected by HC sensors.

The gas acts continuously on the valve spindle at a pressure of about 250-300 bar. In order to prevent the gas from entering the control oil activating system via the clearance around the spindle, the spindle is sealed by means of sealing oil led to the spindle clearance at a pressure higher than the gas pressure (25-50 bar higher).

The fuel (e.g. pilot oil) valve is a standard fuel valve without major changes.

Designs of fuel (e.g. pilot oil) injection valves will allow operation solely on fuel oil up to MCR. If the customer's demand is for the gas engine to run at any time at 100 % load on fuel oil, without stopping the engine for changing the injection equipment, the fuel valve nozzle holes will be as the standard type for normal fuel oil operation. The fuel oil amount when operating on gas is 5-8%. Gas operation is possible at 30% load and above.

Fuel oil booster system

Dual fuel operation requires a fuel oil pressure booster, a position sensor, a FIVA valve to control the injection of fuel oil, and a system oil supply to an ELGI valve to control the injection of gas. Fig. 7.00.04 shows the design control principle with the two fuel valves and two gas valves.

No change is made to the ME fuel oil pressure booster, except that a pressure sensor is added for checking the fuel oil injection pressure. The injected amount of fuel oil is monitored by the position sensor.

The injected gas amount is controlled by the duration of control oil delivery from the ELGI valve. The operating medium is the same system oil as is used for the fuel oil pressure booster.

Exhaust Valve

The exhaust valve consists of the valve housing and the valve spindle. The valve housing is made of cast iron and is arranged for water cooling. The housing is provided with a water cooled bottom piece of steel with a flame hardened seat. The exhaust valve spindle is made of Nimonic. The housing is provided with a spindle guide.

The exhaust valve is tightened to the cylinder cover with studs and nuts. The exhaust valve is opened hydraulically by the electronic valve activation system and is closed by means of air pressure.

The operation of the exhaust valve is controlled by the proportional valve which also activates the fuel injection.

In operation, the valve spindle slowly rotates, driven by the exhaust gas acting on small vanes fixed to the spindle.

Indicator Cock

The engine is fitted with an indicator cock to which the PMI pressure transducer can be connected.

MAN B&W Alpha Cylinder Lubricator

The electronically controlled Alpha cylinder lubricating oil system, used on the MC engines, is applied to the ME-GI/ME-C-GI engines, including its control system.

The main advantages of the Alpha cylinder lubricating oil system, compared with the conventional mechanical lubricator, are:

- Improved injection timing
- Increased dosage flexibility
- Constant injection pressure
- Improved oil distribution in the cylinder liner
- Possibility for prelubrication before starting.

More details about the cylinder lubrication system can be found in Chapter 9.

For long-term gas operation, BN40-50 cylinder oil is necessary. For long-term operation on HFO with a high sulphur content, a BN70 cylinder oil is necessary. If long-term operation on both fuels is foreseen, two storage/service tanks for cylinder lube oil is required onboard.

Gallery Arrangement

The engine is provided with gallery brackets, stanchions, railings and platforms (exclusive of ladders). The brackets are placed at such a height as to provide the best possible overhauling and inspection conditions.

Some main pipes of the engine are suspended from the gallery brackets, and the topmost gallery platform on the manoeuvring side is provided with overhauling holes for the pistons.

The engine is prepared for top bracings on the exhaust side, or on the manoeuvring side.

Piping Arrangements

The engine is delivered with piping arrangements for:

- Fuel oil
- Gas pipes
- Sealing oil pipes
- Heating of fuel oil pipes
- Lubricating oil, piston cooling oil and hydraulic oil pipes
- Cylinder lubricating oil
- Cooling water to scavenge air cooler
- Jacket and turbocharger cooling water
- Cleaning of turbocharger
- Fire extinguishing in scavenge air space
- Starting air
- Control air
- Oil mist detector
- Various drain pipes.

All piping arrangements are made of steel piping, except the control air and steam heating of fuel pipes, which are made of copper.

The pipes are provided with sockets for local instruments, alarm and safety equipment and, furthermore, with a number of sockets for supplementary signal equipment. Chapter 18 deals with the instrumentation.

Gas pipes

A common rail (constant pressure) system is to be fitted for high-pressure gas distribution to each valve block.

Gas pipes are designed with double walls, with the outer shielding pipe designed so as to prevent gas outflow to the machinery spaces in the event of rupture of the inner gas pipe. The intervening space, including also the space around valves, flanges, etc., is equipped with separate mechanical ventilation with a capacity of approx. 10 - 30 air changes per hour.

The pressure in the intervening space is to be below that of the engine room and, as mentioned earlier, (extractor) fan motors are to be placed outside the ventilation ducts, and the fan material must be manufactured from spark-free material. The ventilation inlet air must be taken from a gas safe area.

Gas pipes are arranged in such a way, see Fig. 7.00.03, that air is sucked into the double-wall piping system from around the pipe inlet, from there into the branch pipes to the individual cylinder blocks, via the branch supply pipes to the main supply pipe, and via the suction blower to the atmosphere. Ventilation air is to be exhausted to a safe place.

The double-wall piping system is designed so that every part is ventilated. However, minute volumes around the gas injection valves in the cylinder cover are not ventilated by flowing air for practical reasons. Small gas amounts, which in case of leakages may accumulate in these small clearances, blind ends, etc. cannot be avoided, but the amount of gas will be negligible. Any other leakage gas will be led to the ventilated part of the double-wall piping system and be detected by the HC sensors.

The gas pipes on the engine are designed for 50 % higher pressure than the normal working pressure, and are supported so as to avoid mechanical vibrations. The gas pipes should furthermore be protected against drops of heavy items. The pipes will be pressure tested at 1.5 times the working pressure. The design is to be all-welded as far as practicable, with flange connections only to the necessary extent for servicing purposes.

The branch piping to the individual cylinders must be flexible enough to cope with the thermal expansion of the engine from cold to hot condition.

The gas pipe system is also to be designed so as to avoid excessive gas pressure fluctuations during operation.

Finally, the gas pipes are to be connected to an inert gas purging system.

The above gas pipe design is proven by operating experience and back-up by explosion tests made together with DNV (classification society).

Engine Cross Section

Please see the specific engine Project Guide

Engine Layout and Load Diagrams, SFOC

2

Engine Layout and Load Diagrams

Introduction

The effective power 'P' of a diesel engine is proportional to the mean effective pressure p_e and engine speed 'n', i.e. when using 'c' as a constant:

$$P = c \times p_e \times n$$

so, for constant mep, the power is proportional to the speed:

$$P = c \times n^1 \text{ (for constant mep)}$$

When running with a Fixed Pitch Propeller (FPP), the power may be expressed according to the propeller law as:

$$P = c \times n^3 \text{ (propeller law)}$$

Thus, for the above examples, the power P may be expressed as a power function of the speed 'n' to the power of 'i', i.e.:

$$P = c \times n^i$$

Fig. 2.01.01 shows the relationship for the linear functions, y = ax + b, using linear scales.

The power functions $P = c \times n^i$ will be linear functions when using logarithmic scales:

$$\log (P) = i \times \log (n) + \log (c)$$

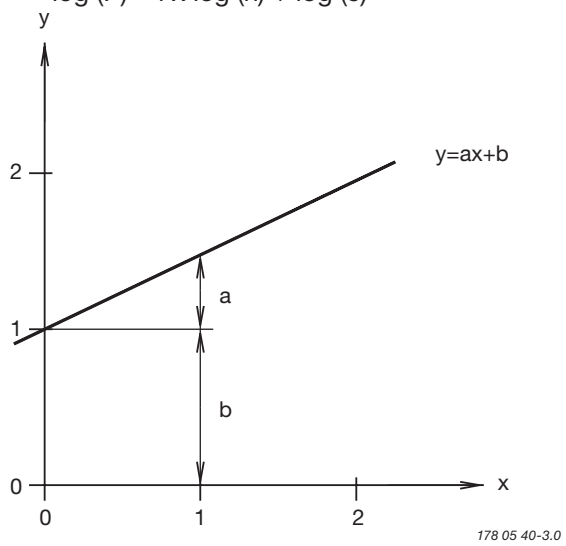

Fig. 2.01.01: Straight lines in linear scales

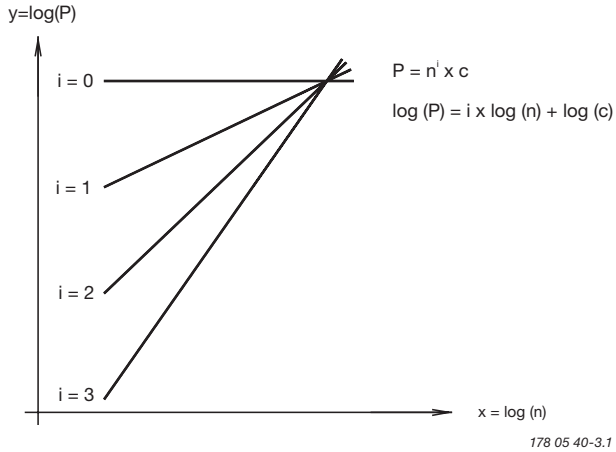

Fig. 2.01.02: Power function curves in logarithmic scales

Thus, propeller curves will be parallel to lines having the inclination i = 3, and lines with constant mep will be parallel to lines with the inclination i = 1.

Therefore, in the Layout Diagrams and Load Diagrams for diesel engines, logarithmic scales are used, giving simple diagrams with straight lines.

Propulsion and Engine Running Points

Propeller curve

The relation between power and propeller speed for a fixed pitch propeller is as mentioned above described by means of the propeller law, i.e. the third power curve:

$$P = c \times n^3, \text{ in which:}$$

P = engine power for propulsion
n = propeller speed
c = constant

Propeller design point

Normally, estimates of the necessary propeller power and speed are based on theoretical calculations for loaded ship, and often experimental tank tests, both assuming optimum operating conditions, i.e. a clean hull and good weather. The combination of speed and power obtained may be called the ship's propeller design point (PD),

placed on the light running propeller curve 6. See below figure. On the other hand, some shipyards, and/or propeller manufacturers sometimes use a propeller design point (PD) that incorporates all or part of the so-called sea margin described below.

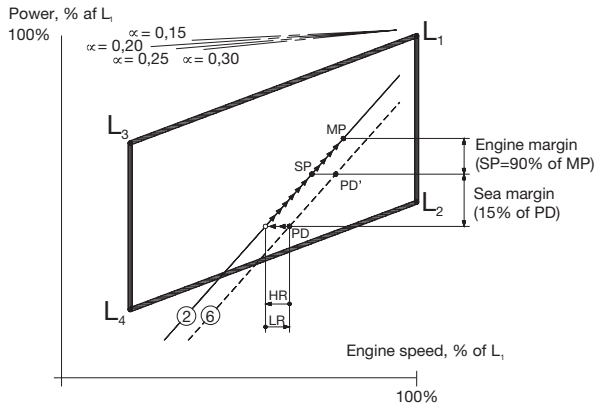

Line 2 Propulsion curve, fouled hull and heavy weather (heavy running), recommended for engine layout
Line 6 Propulsion curve, clean hull and calm weather (light running), for propeller layout
MP Specified MCR for propulsion
SP Continuous service rating for propulsion
PD Propeller design point
HR Heavy running
LR Light running

178 05 41-5.3

Fig. 2.01.03: Ship propulsion running points and engine layout

Fouled hull

When the ship has sailed for some time, the hull and propeller become fouled and the hull's resistance will increase. Consequently, the ship's speed will be reduced unless the engine delivers more power to the propeller, i.e. the propeller will be further loaded and will be heavy running (HR).

As modern vessels with a relatively high service speed are prepared with very smooth propeller and hull surfaces, the gradual fouling after sea trial will increase the hull's resistance and make the propeller heavier running.

Sea margin and heavy weather

If, at the same time the weather is bad, with head winds, the ship's resistance may increase compared to operating in calm weather conditions. When determining the necessary engine power, it is normal practice to add an extra power margin, the so-called sea margin, which is traditionally about 15% of the propeller design (PD) power.

Engine layout (heavy propeller)

When determining the necessary engine layout speed that considers the influence of a heavy running propeller for operating at high extra ship resistance, it is (compared to line 6) recommended to choose a heavier propeller line 2. The propeller curve for clean hull and calm weather line 6 may then be said to represent a 'light running' (LR) propeller.

Compared to the heavy engine layout line 2, we recommend using a light running of **3.0-7.0%** for design of the propeller.

Engine margin

Besides the sea margin, a so-called 'engine margin' of some 10% or 15% is frequently added. The corresponding point is called the 'specified MCR for propulsion' (MP), and refers to the fact that the power for point SP is 10% or 15% lower than for point MP.

Point MP is identical to the engine's specified MCR point (M) unless a main engine driven shaft generator is installed. In such a case, the extra power demand of the shaft generator must also be considered.

Constant ship speed lines

The constant ship speed lines ∝, are shown at the very top of the figure. They indicate the power required at various propeller speeds in order to keep the same ship speed. It is assumed that, for each ship speed, the optimum propeller diameter is used, taking into consideration the total propulsion efficiency. See definition of ∝ in Section 2.02.

Note:
Light/heavy running, fouling and sea margin are overlapping terms. Light/heavy running of the propeller refers to hull and propeller deterioration and heavy weather, whereas sea margin i.e. extra power to the propeller, refers to the influence of the wind and the sea. However, the degree of light running must be decided upon experience from the actual trade and hull design of the vessel.

Propeller diameter and pitch, influence on the optimum propeller speed

In general, the larger the propeller diameter D, the lower is the optimum propeller speed and the kW required for a certain design draught and ship speed, see curve D in the figure below.

The maximum possible propeller diameter depends on the given design draught of the ship, and the clearance needed between the propeller and the aft body hull and the keel.

The example shown in the figure is an 80,000 dwt crude oil tanker with a design draught of 12.2 m and a design speed of 14.5 knots.

When the optimum propeller diameter D is increased from 6.6 m to 7.2. m, the power demand is reduced from about 9,290 kW to 8,820 kW, and the optimum propeller speed is reduced from 120 r/min to 100 r/min, corresponding to the constant ship speed coefficient $\propto$ = 0.28 (see definition of $\propto$ in Section 2.02, page 2).

Once an optimum propeller diameter of maximum 7.2 m has been chosen, the corresponding optimum pitch in this point is given for the design speed of 14.5 knots, i.e. P/D = 0.70.

However, if the optimum propeller speed of 100 r/min does not suit the preferred / selected main engine speed, a change of pitch away from optimum will only cause a relatively small extra power demand, keeping the same maximum propeller diameter:

- going from 100 to 110 r/min (P/D = 0.62) requires 8,900 kW i.e. an extra power demand of 80 kW.
- going from 100 to 91 r/min (P/D = 0.81) requires 8,900 kW i.e. an extra power demand of 80 kW.

In both cases the extra power demand is only of 0.9%, and the corresponding 'equal speed curves' are $\propto$=+0.1 and $\propto$=-0.1, respectively, so there is a certain interval of propeller speeds in which the 'power penalty' is very limited.

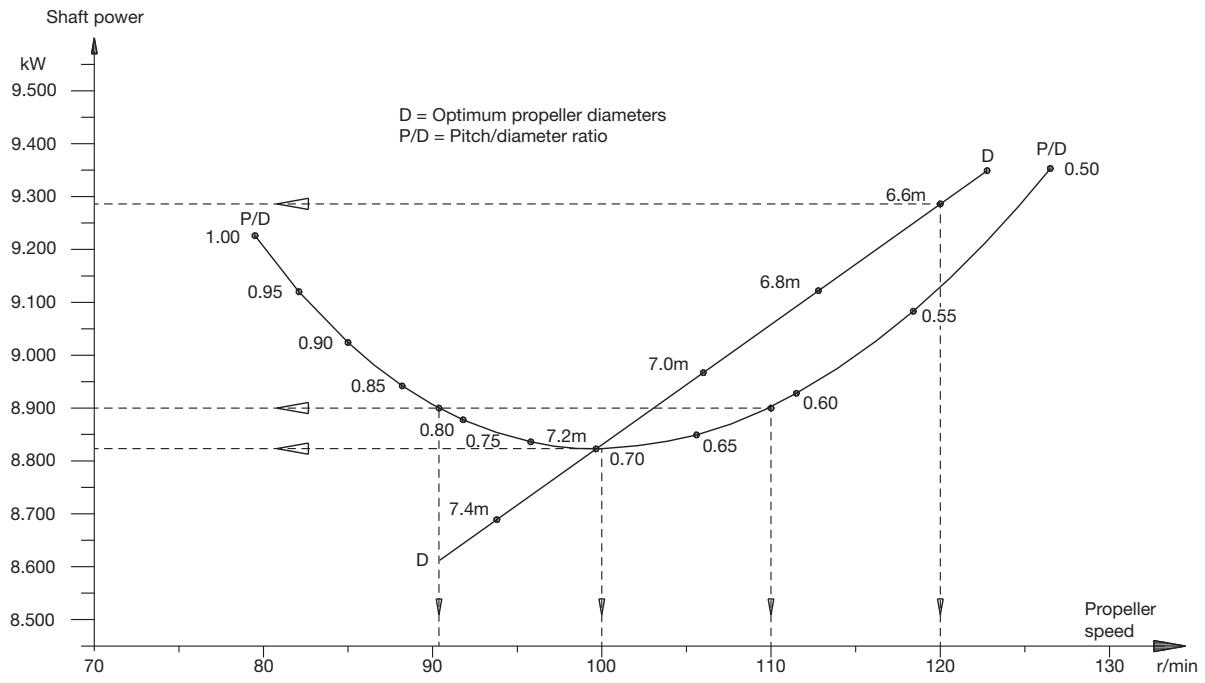

178 47 03-2.0

Fig. 2.02.01: Influence of diameter and pitch on propeller design

Constant ship speed lines

The constant ship speed lines ∝, are shown at the very top of Fig. 2.02.02. These lines indicate the power required at various propeller speeds to keep the same ship speed provided that the optimum propeller diameter with an optimum pitch diameter ratio is used at any given speed, taking into consideration the total propulsion efficiency.

Normally, the following relation between necessary power and propeller speed can be assumed:

$P_2 = P_1 \times (n_2/n_1)^{\propto}$

where:
P = Propulsion power
n = Propeller speed, and
∝= the constant ship speed coefficient.

For any combination of power and speed, each point on lines parallel to the ship speed lines gives the same ship speed.

When such a constant ship speed line is drawn into the layout diagram through a specified propulsion MCR point 'MP_1', selected in the layout area and parallel to one of the ∝-lines, another specified propulsion MCR point 'MP_2' upon this line can be chosen to give the ship the same speed for the new combination of engine power and speed.

Fig. 2.02.02 shows an example of the required power speed point MP_1, through which a constant ship speed curve ∝= 0.25 is drawn, obtaining point MP_2 with a lower engine power and a lower engine speed but achieving the same ship speed.

Provided the optimum pitch/diameter ratio is used for a given propeller diameter the following data applies when changing the propeller diameter:

for general cargo, bulk carriers and tankers
∝= 0.25 -0.30

and for reefers and container vessels
∝= 0.15 -0.25

When changing the propeller speed by changing the pitch diameter ratio, the ∝ constant will be different, see above.

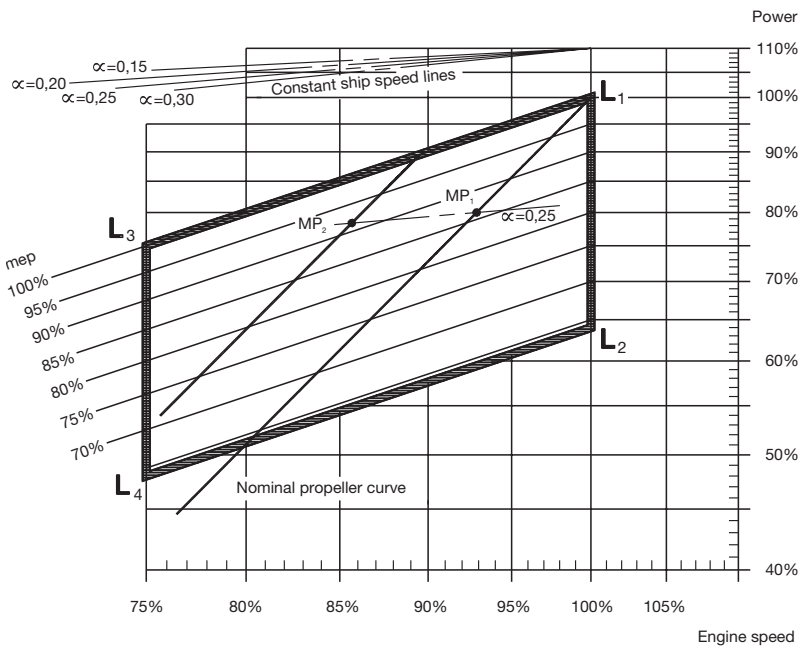

178 05 66-7.0

Fig. 2.02.02: Layout diagram and constant ship speed lines

Layout Diagram Sizes

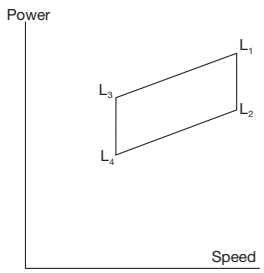

100 - 80% power and
100 - 84% speed range
valid for the types:
L70MC-C/ME-C8,

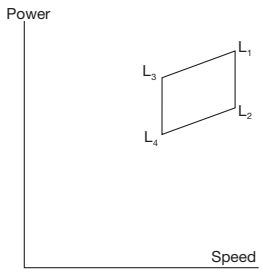

100 - 80% power and
100 - 90% speed range
valid for the types:
K90ME/ME-C9,
K80ME-C9

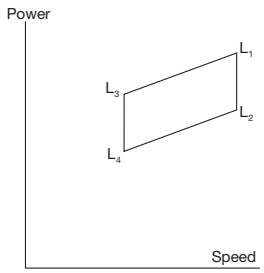

100 - 80% power and
100 - 85% speed range
valid for the types:
K90MC-C/6
K80MC-C/ME-C6,
L60MC-C/ME-C8, S46MC-C8,
S46ME-B8, S42MC7, S40ME-B9, S35MC7, S35ME-B9,
L35MC6, S26MC6,
S90MC-C/ME-C8,
S80MC-C8, S80ME-C8/9,
S70MC-C/ME-C8/-GI, S65ME-C8/-GI, S60MC-C/ME-C8/-GI,
S60ME-B8, S50MC-C/ME-C8,
S50ME-B8/9

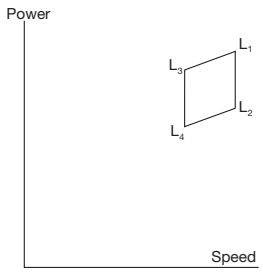

100 - 80% power and
100 - 93% speed range
valid for the types:
K98MC/MC-C7,
K98ME/ME-C7

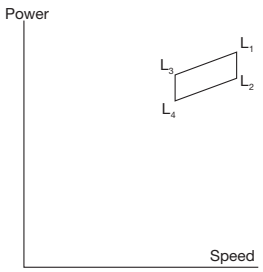

100 - 90% power and
100 - 91.5% speed range
valid for the types:
S40MC-C9,
S35MC-C9,

178 60 45-2.0

See also Section 2.05 for actual project.

Fig. 2.03.01 Layout diagram sizes

Engine Layout and Load Diagram

Engine Layout Diagram

An engine's layout diagram is limited by two constant mean effective pressure (mep) lines L_1– L_3 and L_2– L_4, and by two constant engine speed lines L_1– L_2 and L_3– L_4. The L_1 point refers to the engine's nominal maximum continuous rating, see Fig. 2.04.01.

Within the layout area there is full freedom to select the engine's specified SMCR point M which suits the demand for propeller power and speed for the ship.

On the horizontal axis the engine speed and on the vertical axis the engine power are shown on percentage scales. The scales are logarithmic which means that, in this diagram, power function curves like propeller curves (3rd power), constant mean effective pressure curves (1st power) and constant ship speed curves (0.15 to 0.30 power) are straight lines.

Specified maximum continuous rating (M)

Based on the propulsion and engine running points, as previously found, the layout diagram of a relevant main engine may be drawn-in. The SMCR point (M) must be inside the limitation lines of the layout diagram; if it is not, the propeller speed will have to be changed or another main engine type must be chosen.

Continuous service rating (S)

The continuous service rating is the power needed in service – including the specified sea margin and heavy/light running factor of the propeller – at which the engine is to operate, and point S is identical to the service propulsion point (SP) unless a main engine driven shaft generator is installed.

Matching point (O)

For practical reasons we have chosen to use the designation 'O' for the matching point.

The matching point O is placed on line 1 of the load diagram, see Fig. 2.04.01, and for technical reasons the power of O always has to be equal to the power of M. Point O normally coincides with point M.

For **ME and ME-C/-GI** engines, the timing of the fuel injection and the exhaust valve activation are electronically optimised over a wide operating range of the engine. Therefore the selection of matching point only has a meaning in connection with the turbocharger matching and the compression ratio.

For **ME-B** engines, only the fuel injection (and not the exhaust valve activation) is electronically controlled over a wide operating range of the engine, and the compression ratio is nearly constant as for an MC engine.

The lowest specific fuel oil consumption for the ME and ME-C/-GI engines is optained at 70% and for ME-B engines at 80% of the matching point (O).

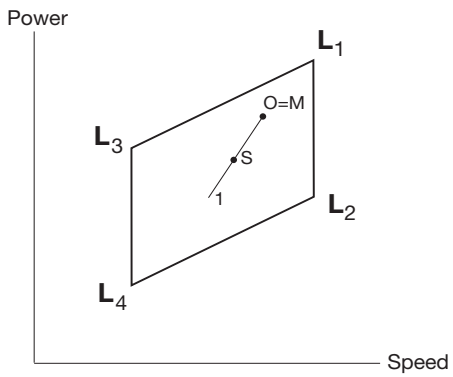

178 60 85-8.0

Fig. 2.04.01: Engine layout diagram

Engine Load Diagram

Definitions

The engine's load diagram, see Fig. 2.04.02, defines the power and speed limits for continuous as well as overload operation of an installed engine having a matching point O and a specified MCR point M that confirms the ship's specification.

Point A is a 100% speed and power reference point of the load diagram, and is defined as the point on the propeller curve (line 1), through the matching point O, having the specified MCR power. Normally, point M is equal to point A, but in special cases, for example if a shaft generator is installed, point M may be placed to the right of point A on line 7.

The service points of the installed engine incorporate the engine power required for ship propulsion and shaft generator, if installed.

Operating curves and limits for continuous operation

The continuous service range is limited by four lines: 4, 5, 7 and 3 (9), see Fig. 2.04.02. The propeller curves, line 1, 2 and 6 in the load diagram are also described below.

Line 1:
Propeller curve through specified MCR (M) engine layout curve.

Line 2:
Propeller curve, fouled hull and heavy weather – heavy running.

Line 3 and line 9:
Line 3 represents the maximum acceptable speed for continuous operation, i.e. 105% of A.

During trial conditions the maximum speed may be extended to 107% of A, see line 9.

The above limits may in general be extended to 105% and during trial conditions to 107% of the nominal L_1 speed of the engine, provided the torsional vibration conditions permit.

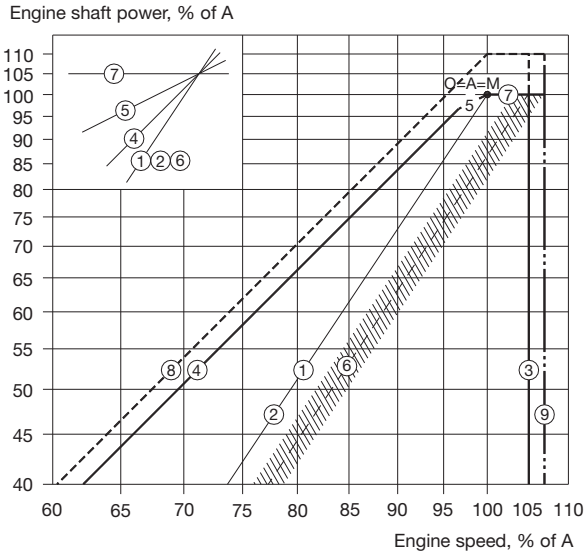

Regarding 'i' in the power function $P = c \times n^i$, see page 2.01.

A	100% reference point
M	Specified MCR point
O	Matching point

Line 1	Propeller curve through matching point (i = 3) (engine layout curve)
Line 2	Propeller curve, fouled hull and heavy weather – heavy running (i = 3)
Line 3	Speed limit
Line 4	Torque/speed limit (i = 2)
Line 5	Mean effective pressure limit (i = 1)
Line 6	Propeller curve, clean hull and calm weather – light running (i = 3), for propeller layout
Line 7	Power limit for continuous running (i = 0)
Line 8	Overload limit
Line 9	Speed limit at sea trial

Point M to be located on line 7 (normally in point A)

178 05 42-7.5

Fig. 2.04.02: Standard engine load diagram

The overspeed set-point is 109% of the speed in A, however, it may be moved to 109% of the *nominal speed* in L_1, provided that torsional vibration conditions permit.

Running at low load above 100% of the nominal L_1 speed of the engine is, however, to be avoided for extended periods. Only plants with controllable pitch propellers can reach this light running area.

Line 4:
Represents the limit at which an ample air supply is available for combustion and imposes a limitation on the maximum combination of torque and speed.

Line 5:
Represents the maximum mean effective pressure level (mep), which can be accepted for continuous operation.

Line 6:
Propeller curve, clean hull and calm weather – light running, used for propeller layout/design.

Line 7:
Represents the maximum power for continuous operation.

Limits for overload operation

The overload service range is limited as follows:

Line 8:
Represents the overload operation limitations.

The area between lines 4, 5, 7 and the heavy dashed line 8 is available for overload running for limited periods only (1 hour per 12 hours).

Line 9:
Speed limit at sea trial.

Limits for low load running

As the fuel injection is automatically controlled over the entire power range, the engine is able to operate down to around 15% of the nominal L_1 speed.

Recommendation

Continuous operation without limitations is allowed only within the area limited by lines 4, 5, 7 and 3 of the load diagram, except on low load operation for CP propeller plants mentioned in the previous section.

The area between lines 4 and 1 is available for operation in shallow waters, heavy weather and during acceleration, i.e. for non-steady operation without any strict time limitation.

After some time in operation, the ship's hull and propeller will be fouled, resulting in heavier running of the propeller, i.e. the propeller curve will move to the left from line 6 towards line 2, and extra power is required for propulsion in order to keep the ship's speed.

In calm weather conditions, the extent of heavy running of the propeller will indicate the need for cleaning the hull and possibly polishing the propeller.

Once the specified MCR (and the matching point) have been chosen, the capacities of the auxiliary equipment will be adapted to the specified MCR, and the turbocharger specification and the compression ratio will be selected.

If the specified MCR (and the matching point) is to be increased later on, this may involve a change of the pump and cooler capacities, change of the fuel valve nozzles, adjusting of the cylinder liner cooling, as well as rematching of the turbocharger or even a change to a larger size of turbocharger. In some cases it can also require larger dimensions of the piping systems.

It is therefore of utmost importance to consider, already at the project stage, if the specification should be prepared for a later power increase. This is to be indicated in the Extent of Delivery.

Extended load diagram for ships operating in extreme heavy running conditions

When a ship with fixed pitch propeller is operating in normal sea service, it will in general be operating in the hatched area around the design propeller curve 6, as shown on the standard load diagram in Fig. 2.04.02.

Sometimes, when operating in heavy weather, the fixed pitch propeller performance will be more heavy running, i.e. for equal power absorption of the propeller, the propeller speed will be lower and the propeller curve will move to the left.

As the low speed main engines are directly coupled to the propeller, the engine has to follow the propeller performance, i.e. also in heavy running propeller situations. For this type of operation, there is normally enough margin in the load area between line 6 and the normal torque/speed limitation line 4, see Fig. 2.04.02. To the left of line 4 in torque-rich operation, the engine will lack air from the turbocharger to the combustion process, i.e. the heat load limits may be exceeded and bearing loads might also become too high.

For some special ships and operating conditions, it would be an advantage - when occasionally needed - to be able to operate the propeller/main engine as much as possible to the left of line 6, but inside the torque/speed limit, line 4.

Such cases could be for:

- ships sailing in areas with very heavy weather
- ships operating in ice
- ships with two fixed pitch propellers/two main engines, where one propeller/one engine is declutched for one or the other reason.

The increase of the operating speed range between line 6 and line 4 of the standard load diagram, see Fig. 2.04.02, may be carried out as shown for the following engine Example with an extended load diagram for speed derated engine with increased light running.

Extended load diagram for speed derated engines with increased light running

The maximum speed limit (line 3) of the engines is 105% of the SMCR (Specified Maximum Continuous Rating) speed, as shown in Fig. 2.04.02.

However, for speed and, thereby, power derated engines it is possible to extend the maximum speed limit to 105% of the engine's nominal MCR speed, line 3', but only provided that the torsional vibration conditions permit this. Thus, the shafting, with regard to torsional vibrations, has to be approved by the classification society in question, based on the extended maximum speed limit.

When choosing an increased light running to be used for the design of the propeller, the load diagram area may be extended from line 3 to line 3', as shown in Fig. 2.04.03, and the propeller/main engine operating curve 6 may have a correspondingly increased heavy running margin before exceeding the torque/speed limit, line 4.

A corresponding slight reduction of the propeller efficiency may be the result, due to the higher propeller design speed used.

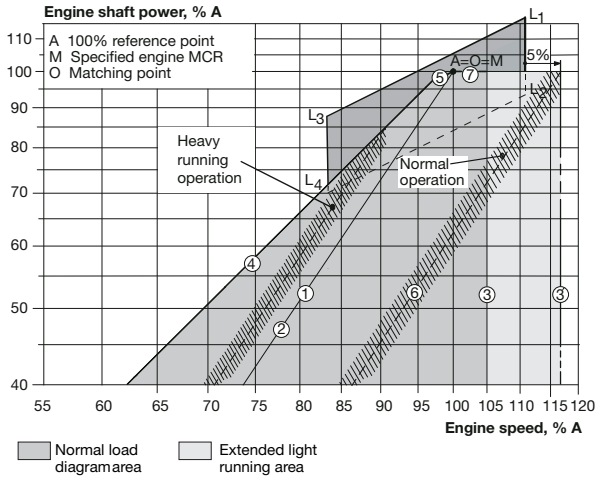

Line 1: Propeller curve through matching point (O)
- layout curve for engine
Line 2: Heavy propeller curve
- fouled hull and heavy seas
Line 3: Speed limit
Line 3': **Extended speed limit**, provided torsional vibration conditions permit
Line 4: Torque/speed limit
Line 5: Mean effective pressure limit
Line 6: Increased light running propeller curve
- clean hull and calm weather
- layout curve for propeller
Line 7: Power limit for continuous running

178 60 79-9.0

Fig. 2.04.03: Extended load diagram for speed derated engine with increased light running

Examples of the use of the Load Diagram

In the following are some examples illustrating the flexibility of the layout and load diagrams.

- Example 1 shows how to place the load diagram for an engine without shaft generator coupled to a fixed pitch propeller.
- Example 2 are diagrams for the same configuration, but choosing a matching point on the left of the heavy running propeller curve (2) providing an extra engine margin for heavy running similar to the case in Fig. 2.04.03.
- Example 3 shows the same layout for an engine with fixed pitch propeller (example 1), but with a shaft generator.
- Example 4 is a special case of example 3, where the specified MCR is placed near the top of the layout diagram.
  In this case the shaft generator is cut off, and the GenSets used when the engine runs at specified MCR. This makes it possible to choose a smaller engine with a lower power output.
- Example 5 shows diagrams for an engine coupled to a controllable pitch propeller, with or without a shaft generator, constant speed or combinator curve operation.

For a specific project, the layout diagram for actual project shown later in this chapter may be used for construction of the actual load diagram.

Example 1: Normal running conditions.
Engine coupled to fixed pitch propeller (FPP) and without shaft generator

Layout diagram

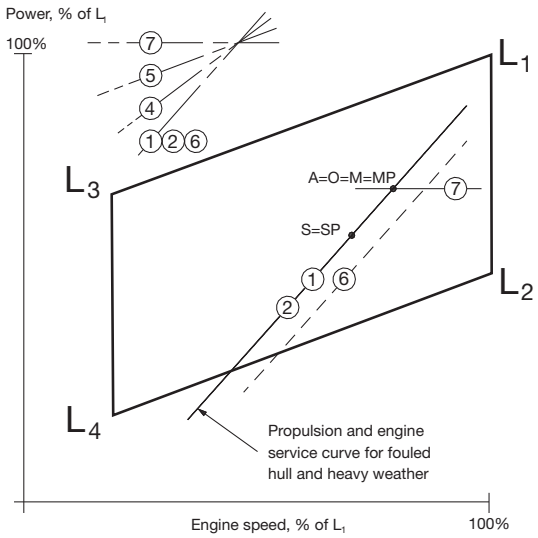

Load diagram

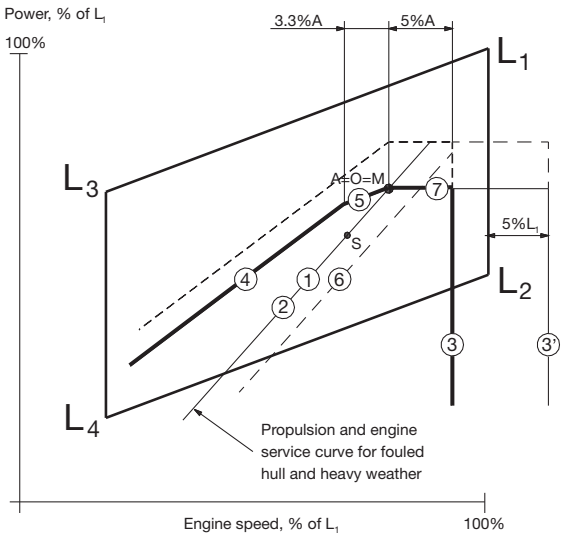

M	Specified MCR of engine
S	Continuous service rating of engine
O	Matching point of engine
A	Reference point of load diagram
MP	Specified MCR for propulsion
SP	Continuous service rating of propulsion

The specified MCR (M) and the matching point O and its propeller curve 1 will normally be selected on the engine service curve 2.

Point A is then found at the intersection between propeller curve 1 (2) and the constant power curve through M, line 7. In this case point A is equal to point M and point O.

Point A of load diagram is found:

Line 1	Propeller curve through matching point (O) is equal to line 2
Line 7	Constant power line through specified MCR (M)
Point A	Intersection between line 1 and 7

Once point A has been found in the layout diagram, the load diagram can be drawn, as shown in the figure, and hence the actual load limitation lines of the diesel engine may be found by using the inclinations from the construction lines and the %-figures stated.

178 05 44-0.8

Fig. 2.04.04: Normal running conditions. Engine coupled to a fixed pitch propeller (FPP) and without a shaft generator

Example 2: Special running conditions.
Engine coupled to fixed pitch propeller (FPP) and without shaft generator

Layout diagram

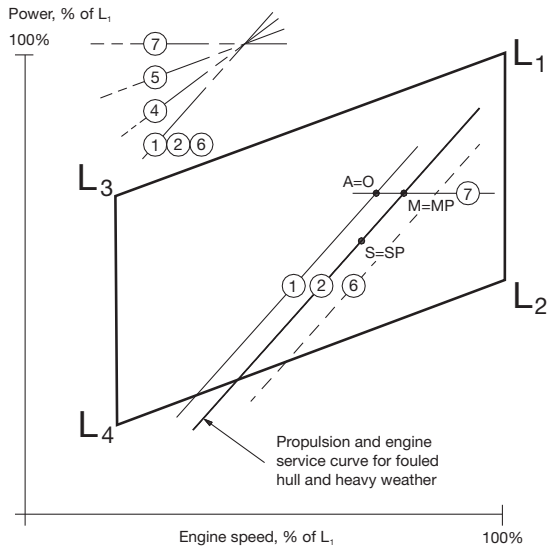

Load diagram

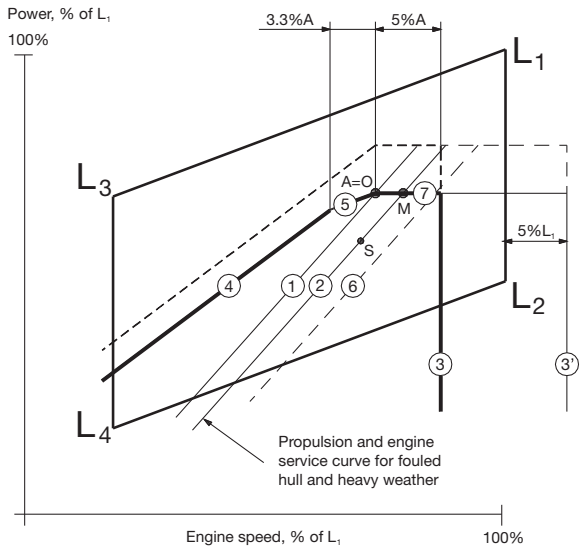

M	Specified MCR of engine
S	Continuous service rating of engine
O	Matching point of engine
A	Reference point of load diagram
MP	Specified MCR for propulsion
SP	Continuous service rating of propulsion

In this example, the matching point O has been selected more to the left than in example 1, providing an extra engine margin for heavy running operation in heavy weather conditions. In principle, the light running margin has been increased for this case.

Point A of load diagram is found:

Line 1	Propeller curve through matching point (O) placed to the left of line 2
Line 7	Constant power line through specified MCR (M)
Point A	Intersection between line 1 and 7

178 05 46-4.8

Fig. 2.04.05: Special running conditions. Engine coupled to a fixed pitch propeller (FPP) and without a shaft generator

Example 3: Normal running conditions.
Engine coupled to fixed pitch propeller (FPP) and with shaft generator

Layout diagram

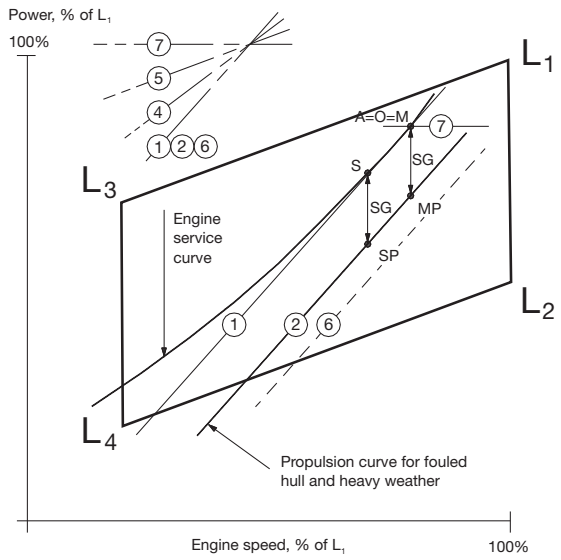

Load diagram

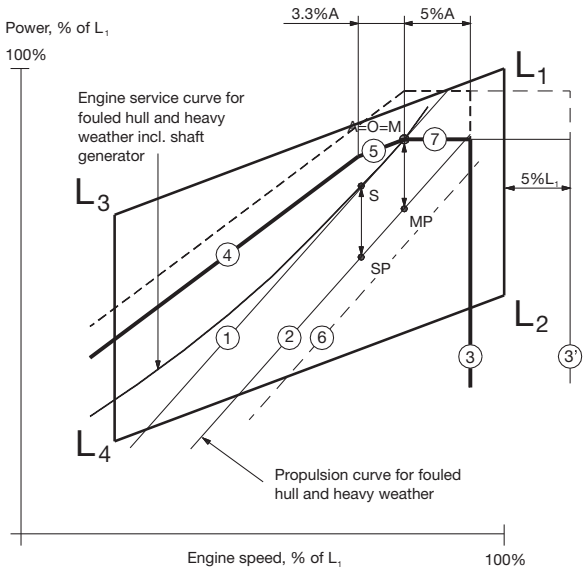

M	Specified MCR of engine
S	Continuous service rating of engine
O	Matching point of engine
A	Reference point of load diagram
MP	Specified MCR for propulsion
SP	Continuous service rating of propulsion
SG	Shaft generator power

Point A of load diagram is found:

Line 1	Propeller curve through matching point (O)
Line 7	Constant power line through specified MCR (M)
Point A	Intersection between line 1 and 7

In example 3 a shaft generator (SG) is installed, and therefore the service power of the engine also has to incorporate the extra shaft power required for the shaft generator's electrical power production.

In the figure, the engine service curve shown for heavy running incorporates this extra power.

The matching point O = A = M will be chosen on this curve, as shown.

Point A is then found in the same way as in example 1 and the load diagram can be drawn as shown in the figure.

178 05 48-8.8

Fig. 2.04.06: Normal running conditions. Engine coupled to a fixed pitch propeller (FPP) and with a shaft generator

Example 4: Special running conditions.
Engine coupled to fixed pitch propeller (FPP) and with shaft generator

Layout diagram

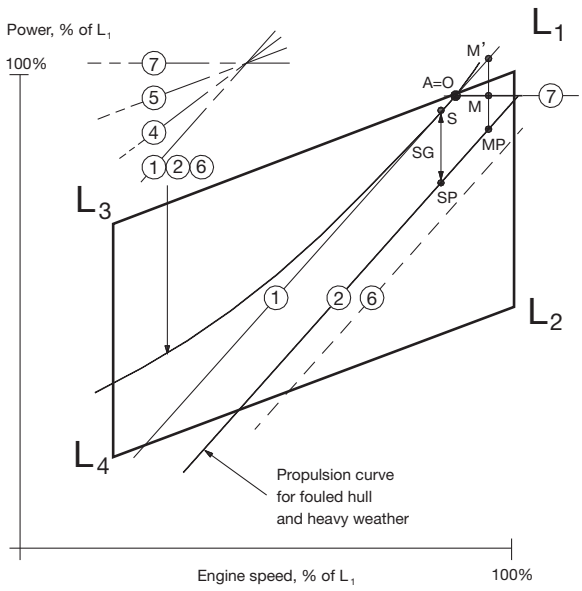

Load diagram

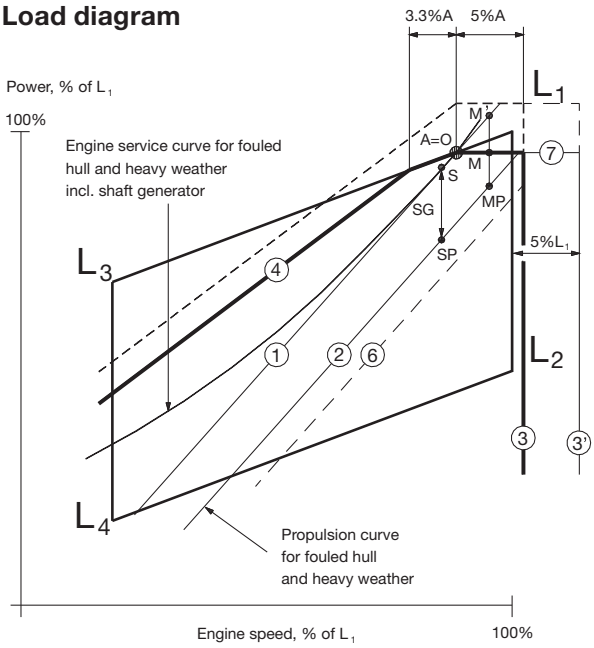

M	Specified MCR of engine
S	Continuous service rating of engine
O	Matching point of engine
A	Reference point of load diagram
MP	Specified MCR for propulsion
SP	Continuous service rating of propulsion
SG	Shaft generator

Point A and M of the load diagram are found:

Line 1	Propeller curve through point S
Point A	Intersection between line 1 and line $L_1 - L_3$
Point M	Located on constant power line 7 through point A and with MP's speed
Point O	Equal to point A

Also for this special case in example 4, a shaft generator is installed but, compared to example 3, this case has a specified MCR for propulsion, MP, placed at the top of the layout diagram.

This involves that the intended specified MCR of the engine M' will be placed outside the top of the layout diagram.

One solution could be to choose a larger diesel engine with an extra cylinder, but another and cheaper solution is to reduce the electrical power production of the shaft generator when running in the upper propulsion power range.

In choosing the latter solution, the required specified MCR power can be reduced from point M' to point M as shown. Therefore, when running in the upper propulsion power range, a diesel generator has to take over all or part of the electrical power production.

However, such a situation will seldom occur, as ships are rather infrequently running in the upper propulsion power range.

Point A, having the highest possible power, is then found at the intersection of line $L_1 - L_3$ with line 1 and the corresponding load diagram is drawn. Point M is found on line 7 at MP's speed, and point O=A.

178 06 35-1.8

Fig. 2.04.07: Special running conditions. Engine coupled to a fixed pitch propeller (FPP) and with a shaft generator

Example 5: Engine coupled to controllable pitch propeller (CPP) with or without shaft generator

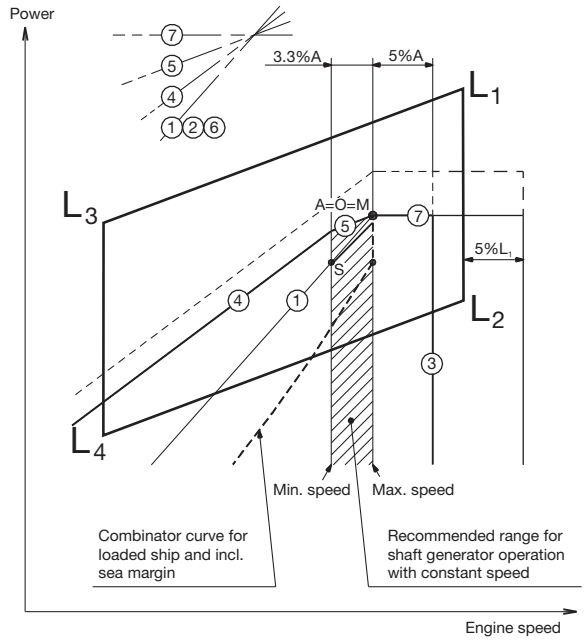

M	Specified MCR of engine
O	Matching point of engine
A	Reference point of load diagram
S	Continous service rating of engine

178 39 31-4.4

Fig. 2.04.08: Engine with Controllable Pitch Propeller (CPP), with or without a shaft generator

Layout diagram - without shaft generator
If a controllable pitch propeller (CPP) is applied, the combinator curve (of the propeller) will normally be selected for loaded ship including sea margin.

The combinator curve may for a given propeller speed have a given propeller pitch, and this may be heavy running in heavy weather like for a fixed pitch propeller.

Therefore it is recommended to use a light running combinator curve (the dotted curve which includes the sea power margin) as shown in the figure to obtain an increased operation margin of the diesel engine in heavy weather to the limit indicated by curves 4 and 5.

Layout diagram - with shaft generator
The hatched area shows the recommended speed range between 100% and 96.7% of the specified MCR speed for an engine with shaft generator running at constant speed.

The service point S can be located at any point within the hatched area.

The procedure shown in examples 3 and 4 for engines with FPP can also be applied here for engines with CPP running with a combinator curve.

The matching point O
O may, as earlier described, be chosen equal to point M, see below.

Load diagram
Therefore, when the engine's specified MCR point (M) has been chosen including engine margin, sea margin and the power for a shaft generator, if installed, point M may be used as point A of the load diagram, which can then be drawn.

The position of the combinator curve ensures the maximum load range within the permitted speed range for engine operation, and it still leaves a reasonable margin to the limit indicated by curves 4 and 5.

Diagram for actual project

This figure contains a layout diagram that can be used for constructing the load diagram for an actual project, using the %-figures stated and the inclinations of the lines.

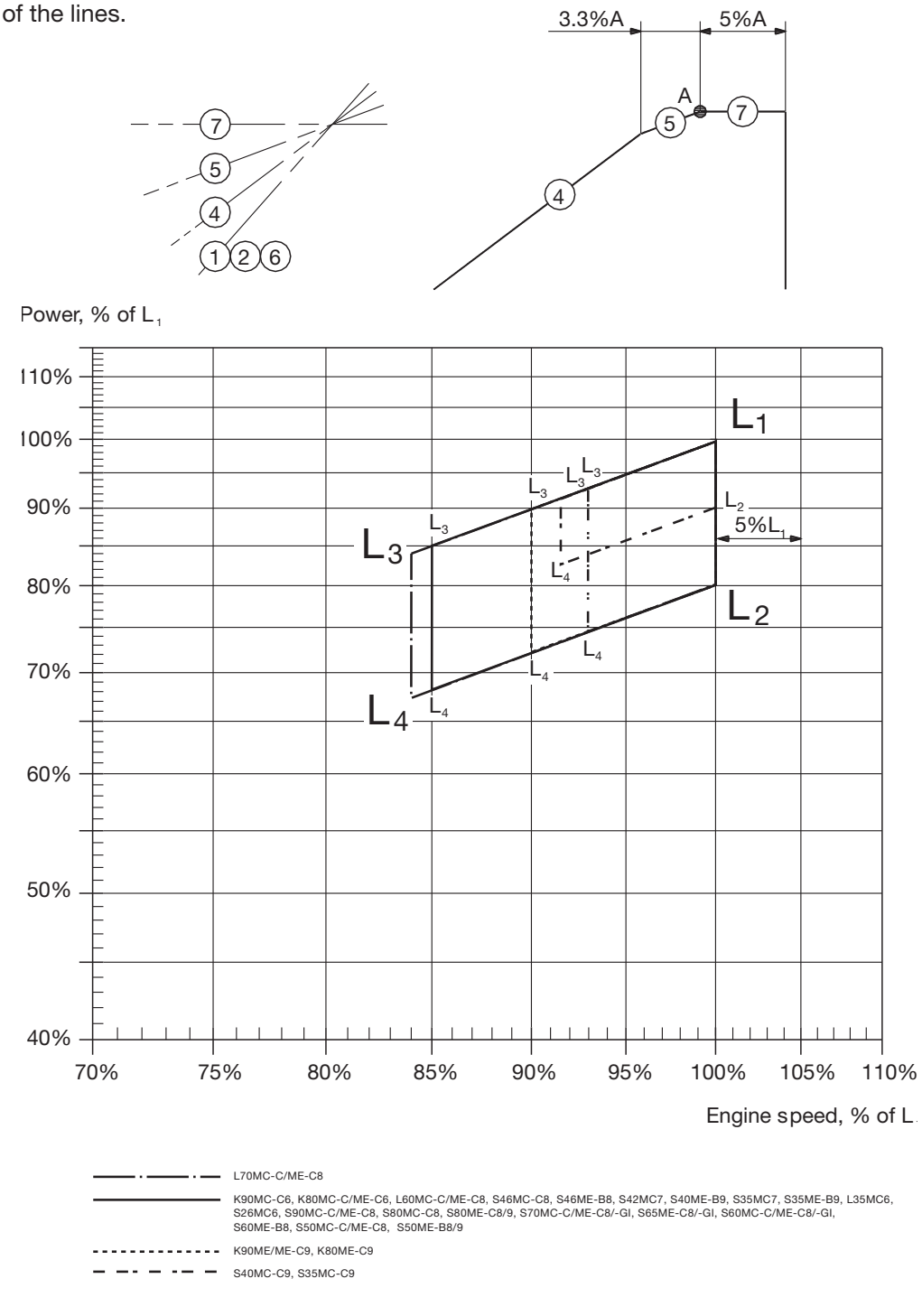

Fig. 2.05.01: Construction of layout diagram

Specific Fuel Oil Consumption, ME versus MC engines

As previously mentioned the main feature of the ME engine is that the fuel injection and the exhaust valve timing are optimised automatically over the entire power range, and with a minimum speed down to around 15% of the L_1 speed.

Comparing the specific fuel oil comsumption (SFOC) of the ME and the MC engines, it can be seen from the figure below that the great advantage of the ME engine is a lower SFOC at part loads.

It is also noted that the lowest SFOC for the ME engine is at 70% of O, whereas it was at 80% of O for the MC engine.

For the ME engine only the turbocharger matching and the compression ratio (shims under the piston rod) remain as variables to be determined by the engine maker / MAN Diesel.

The calculation of the expected specific fuel oil consumption (SFOC) can be carried out by means of the following figures for fixed pitch propeller and for controllable pitch propeller, constant speed. Throughout the whole load area the SFOC of the engine depends on where the matching point (O) is chosen.

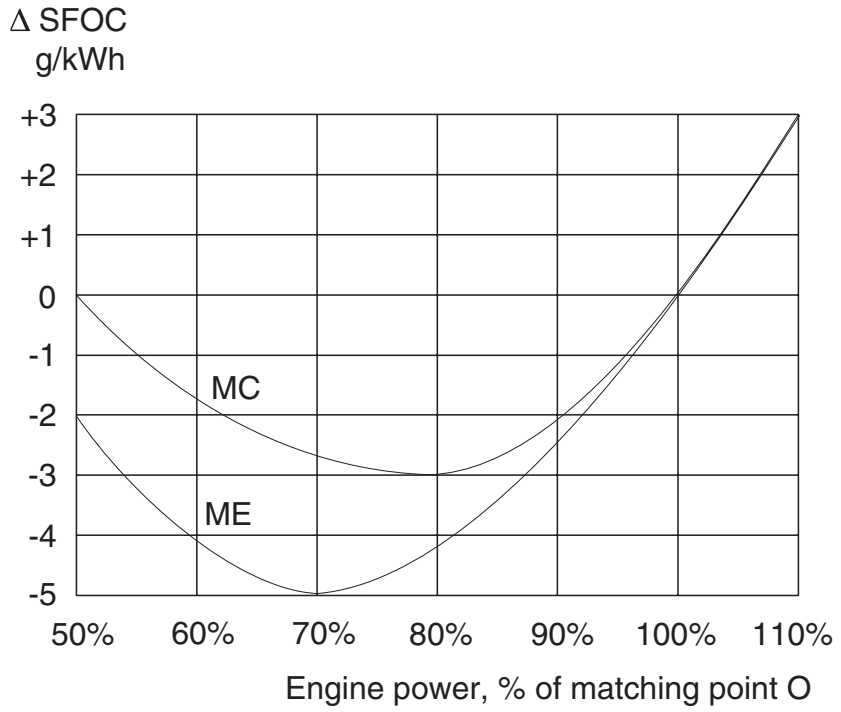

198 97 38-9.2

Fig. 2.06.01: Example of part load SFOC curves for ME and MC with fixed pitch propeller

SFOC for High Efficiency Turbochargers

All engine types 50 and larger are as standard fitted with high efficiency turbochargers, option: 4 59 104.

The high efficiency turbocharger is applied to the engine in the basic design with the view to obtaining the lowest possible Specific Fuel Oil Consumption (SFOC) values, see example in Fig. 2.07.01.

At part load running the lowest SFOC may be obtained at 70% of the matched power = 70% of the specified MCR.

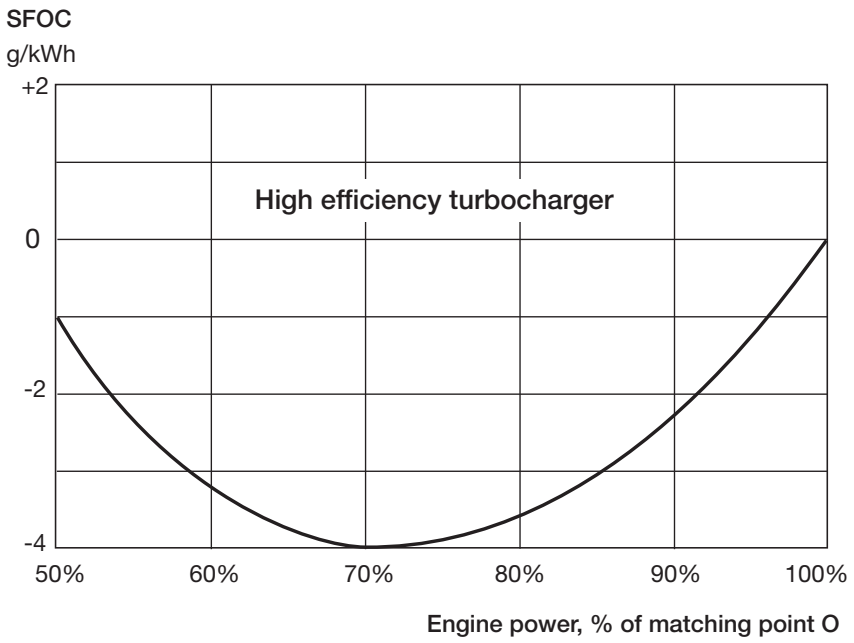

178 60 95-4.0

Fig. 2.07.01: Example of part load SFOC curves for high efficiency turbochargers

SFOC reference conditions and guarantee

SFOC at reference conditions

The SFOC is given in **g/kWh** based on the reference ambient conditions stated in ISO 3046-1:2002(E) and ISO 15550:2002(E):

1,000 mbar ambient air pressure
25 °C ambient air temperature
25 °C scavenge air coolant temperature

and is related to a fuel oil with a lower calorific value of 42,700 kJ/kg (~10,200 kcal/kg).

Any discrepancies between g/kWh and g/BHPh are due to the rounding of numbers for the latter.

For lower calorific values and for ambient conditions that are different from the ISO reference conditions, the SFOC will be adjusted according to the conversion factors in the table below.

		With p_{max} adjusted	Without p_{max} adjusted
Parameter	**Condition change**	**SFOC change**	**SFOC change**
Scav. air coolant temperature	per 10 °C rise	+ 0.60%	+ 0.41%
Blower inlet temperature	per 10 °C rise	+ 0.20%	+ 0.71%
Blower inlet pressure	per 10 mbar rise	- 0.02%	- 0.05%
Fuel oil lower calorific value	rise 1% (42,700 kJ/kg)	-1.00%	- 1.00%

With for instance 1 °C increase of the scavenge air coolant temperature, a corresponding 1 °C increase of the scavenge air temperature will occur and involves an SFOC increase of 0.06% if p_{max} is adjusted to the same value.

SFOC guarantee

The SFOC guarantee refers to the above ISO reference conditions and lower calorific value and is valid for one running point only. The guaranteed running point is equal to the power-speed combination in the matching point (O) = 100% SMCR but, if requested, a running point between 85% and 100% SMCR can be selected.

The SFOC guarantee is given with a tolerance of 5%.

Recommended cooling water temperature during normal operation

In general, it is recommended to operate the main engine with the lowest possible cooling water temperature to the air coolers, as this will reduce the fuel consumption of the engine, i.e. the engine performance will be improved.

However, shipyards often specify a constant (maximum) central cooling water temperature of 36 °C, not only for tropical ambient temperature conditions, but also for lower ambient temperature conditions. The purpose is probably to reduce the electric power consumption of the cooling water pumps and/or to reduce water condensation in the air coolers.

Thus, when operating with 36 °C cooling water instead of for example 10 °C (to the air coolers), the specific fuel oil consumption will increase by approx. 2 g/kWh.

Examples of Graphic Calculation of SFOC

The following diagrams a, b and c, valid for fixed pitch propeller (b) and constant speed (c), respectively, show the reduction of SFOC in g/kWh, relative to the SFOC for the nominal MCR L_1 rating.

The solid lines are valid at 100%, 70% and 50% of matching point (O).

Point O is drawn into the above-mentioned Diagrams b or c. A straight line along the constant mep curves (parallel to L_1-L_3) is drawn through point O. The intersections of this line and the curves indicate the reduction in specific fuel oil consumption at 100, 70 and 50% of the matching point, related to the SFOC stated for the nominal MCR L_1 rating.

An example of the calculated SFOC curves are shown in Diagram a, and is valid for an engine with fixed pitch propeller, see Fig. 2.10.01.

SFOC Calculations for S70ME-C8-GI, S65ME-C8-GI, S60ME-C8-GI

Data at nominel MER (L_1)			SFOC at nominal MER (L_1)
			High efficiency TC
Engine	**kW**	**r/min**	**g/kWh**
5-8S70ME-C8-GI	3,270	91	171
5-8S65ME-C8-GI	2,870	95	171
5-8S60ME-C8-GI	2,380	105	171
5-9L60ME-C8	2,340	123	172

Data matching point (O=M):	
	cyl. No.
Power: 100% of (O)	kW
Speed: 100% of (O)	r/min
SFOC found:	g/kWh

Diagram a

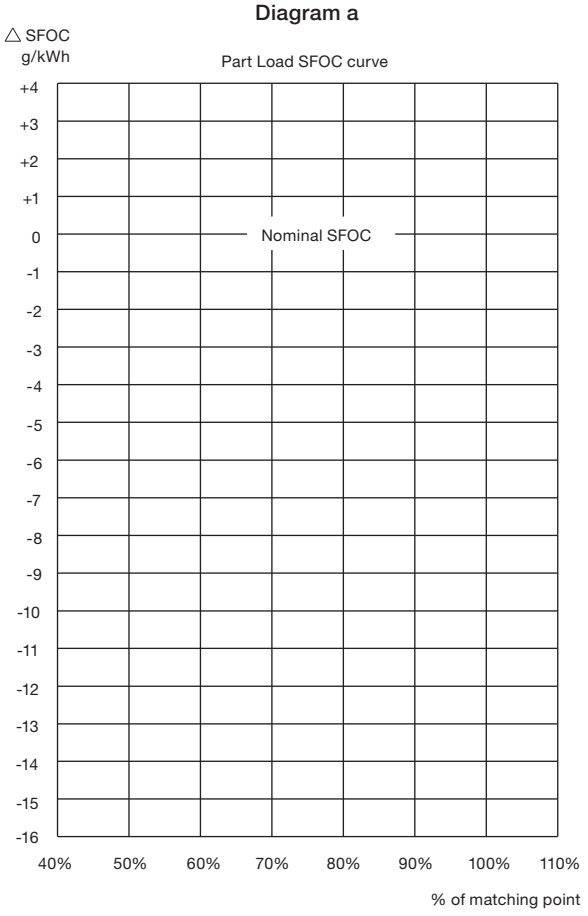

178 60 93-0.0

Fig. 2.09.01

SFOC for S70ME-C8-GI, S65ME-C8-GI, S60ME-C8-GI with fixed pitch propeller

Diagram b

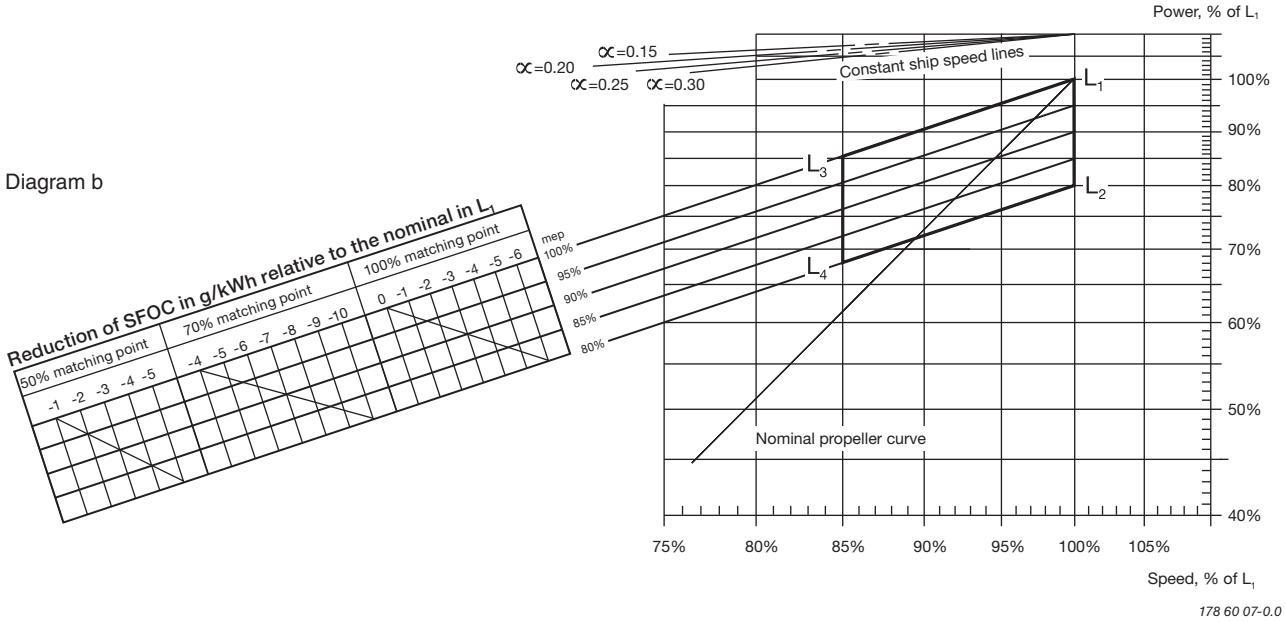

Fig. 2.09.02

SFOC for S70ME-C8-GI, S65ME-C8-GI, S60ME-C8-GI8 with constant speed

Diagram c

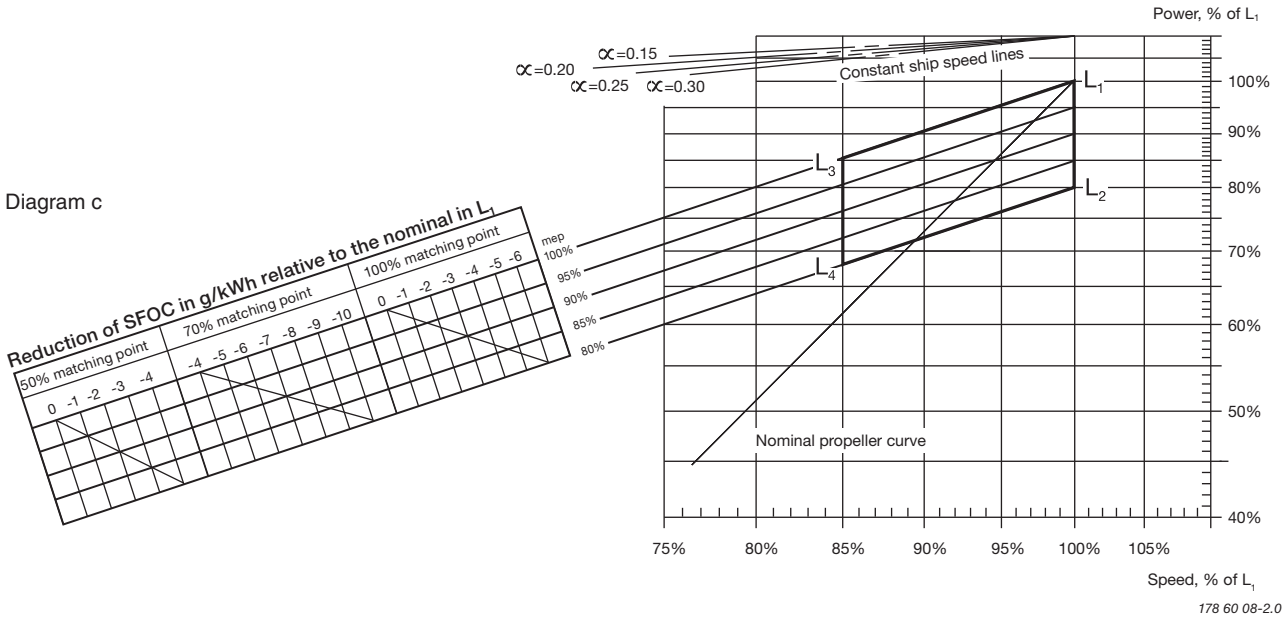

Fig. 2.09.03

SFOC calculations, example

Data at nominel MCR (L_1): 6S70ME-C8/-GI	
Power 100%	19,620 kW
Speed 100%	91 r/min
Nominal SFOC:	
• High efficiency turbocharger	171 g/kWh

Example of specified MCR = M	
Power	16,677 kW (85% L_1)
Speed	81.9 r/min (90% L_1)
Turbocharger type	High efficiency
SFOC found in O=M	169.3 g/kWh

The matching point O used in the above example for the SFOC calculations:

O = 100% M = 85% L_1 power and 90% L_1 speed

Diagram b

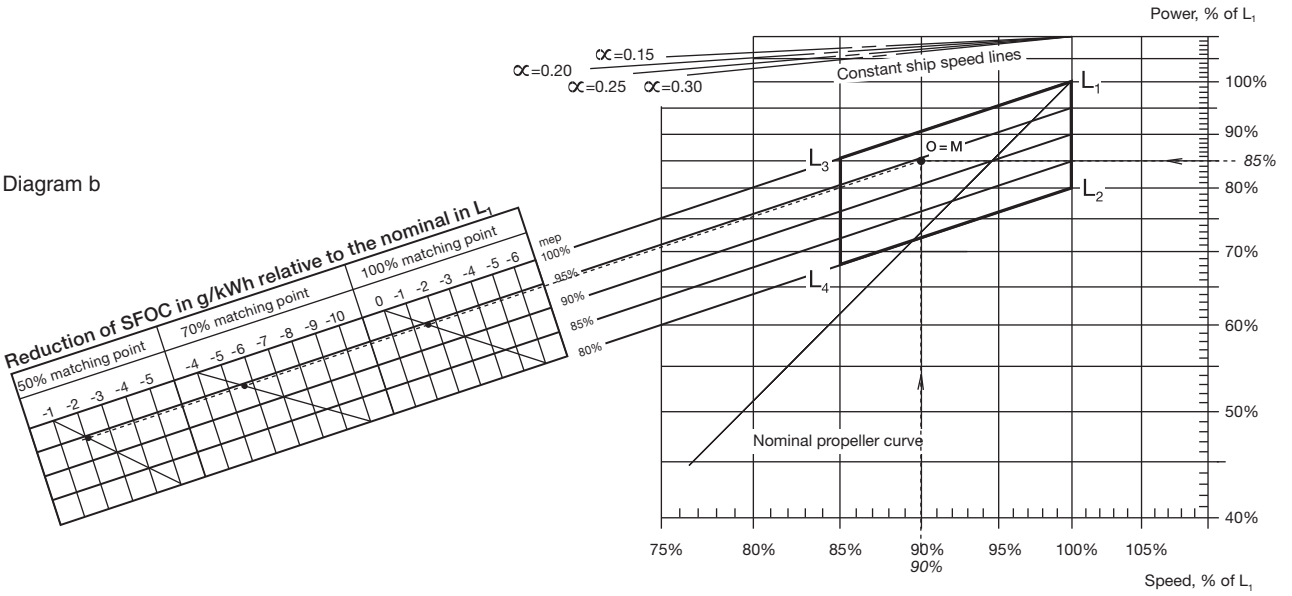

The reductions, see diagram b, in g/kWh compared to SFOC in L_1:

Power in	Part load points		SFOC g/kWh	SFOC g/kWh
100% O	1	100% M	-1.7	169.3
70% O	2	70% M	-5.7	165.3
50% O	3	50% M	-2.1	168.9

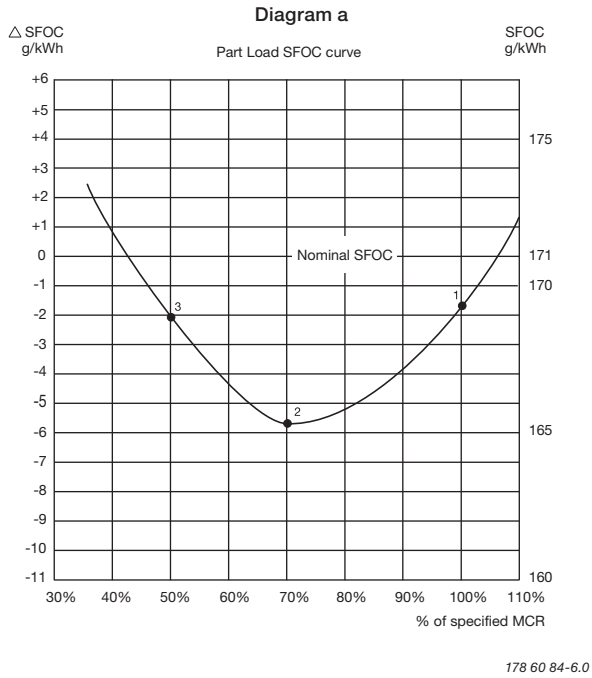

Fig. 2.10.01: Example of SFOC for derated 6S70ME-C8/-GI with fixed pitch propeller and high efficiency turbocharger

Fuel Consumption at an Arbitrary Load

Once the matching point (O) of the engine has been chosen, the specific fuel oil consumption at an arbitrary point S_1, S_2 or S_3 can be estimated based on the SFOC at point '1' and '2'.

These SFOC values can be calculated by using the graphs for the relevant engine type for the propeller curve I and for the constant speed curve II, giving the SFOC at points 1 and 2, respectively.

Next the SFOC for point S_1 can be calculated as an interpolation between the SFOC in points '1' and '2', and for point S_3 as an extrapolation.

The SFOC curve through points S_2, on the left of point 1, is symmetrical about point 1, i.e. at speeds lower than that of point 1, the SFOC will also increase.

The above-mentioned method provides only an approximate value. A more precise indication of the expected SFOC at any load can be calculated by using our computer program. This is a service which is available to our customers on request.

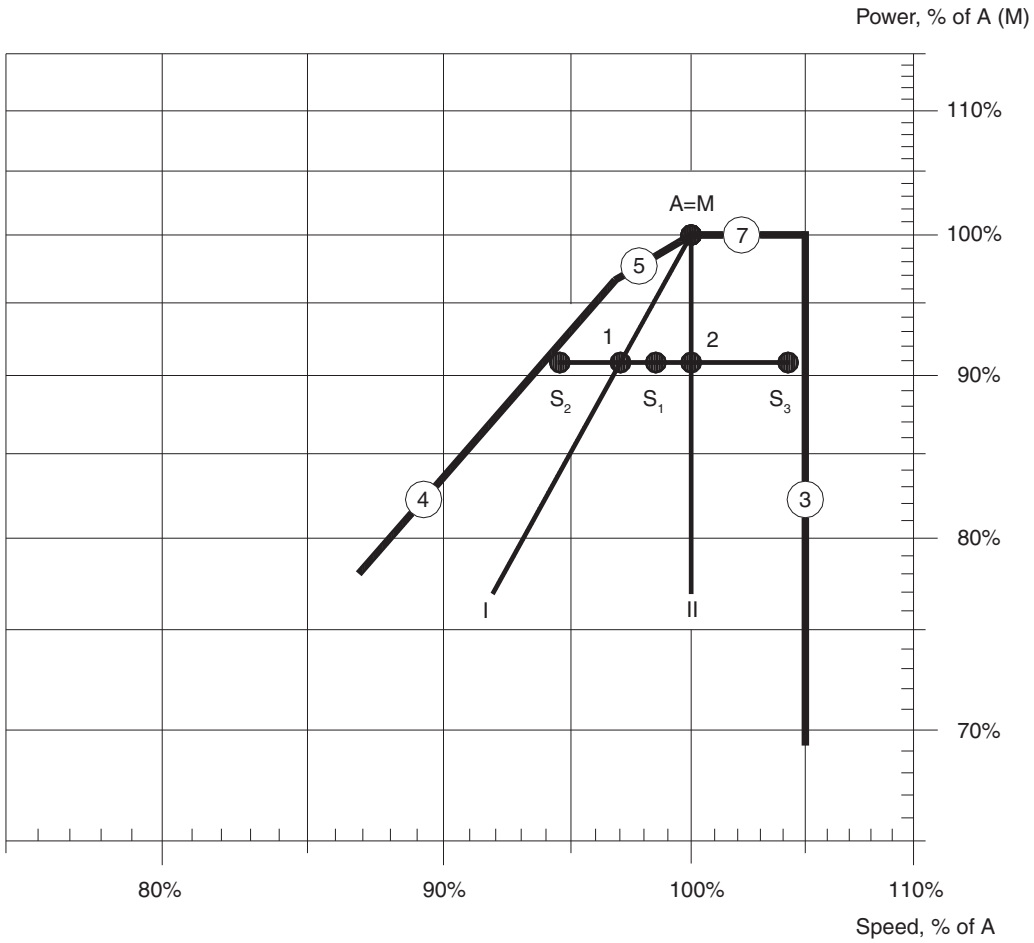

198 95 96-2.2

Fig. 2.11.01: SFOC at an arbitrary load

Emission Control

IMO NO_x emission limits

All ME, ME-B and ME-C/-GI engines are, as standard, delivered in compliance with the IMO speed dependent NOx limit, measured according to ISO 8178 Test Cycles E2/E3 for Heavy Duty Diesel Engines. These are referred to in the Extent of Delivery as EoD: 4 06 060 Economy mode with the options: 4 06 060a Engine test cycle E3 or 4 06 060b Engine test cycle E2.

NO_x reduction methods

The NO_x content in the exhaust gas can be reduced with primary and/or secondary reduction methods.

The primary methods affect the combustion process directly by reducing the maximum combustion temperature, whereas the secondary methods are means of reducing the emission level without changing the engine performance, using external equipment.

0-30% NO_x reduction

The ME engines can be delivered with several operation modes, options: 4 06 063 Port load, 4 06 064 Special emission, 4 06 065 Other emission limit, and 4 06 066 Dual fuel.

These operation modes may include a 'Low NOx mode' for operation in, for instance, areas with restriction in NOx emission.

For further information on engine operation modes, see Extent of Delivery.

30-50% NO_x reduction

Water emulsification of the heavy fuel oil is a well proven primary method. The type of homogenizer is either ultrasonic or mechanical, using water from the freshwater generator and the water mist catcher.

The pressure of the homogenised fuel has to be increased to prevent the formation of steam and cavitation. It may be necessary to modify some of the engine components such as the fuel oil pressure booster, fuel injection valves and the engine control system.

Up to 95-98% NO_x reduction

This reduction can be achieved by means of secondary methods, such as the SCR (Selective Catalytic Reduction), which involves an after-treatment of the exhaust gas, see Section 3.02.

Plants designed according to this method have been in service since 1990 on five vessels, using Haldor Topsøe catalysts and ammonia as the reducing agent, urea can also be used.

The SCR unit can be located separately in the engine room or horizontally on top of the engine. The compact SCR reactor is mounted before the turbocharger(s) in order to have the optimum working temperature for the catalyst. However attention have to be given to the type of HFO to be used.

For further information about emission control, please refer to our publication:

Exhaust Gas Emission Control Today and Tomorrow

The publications are available at www.mandieselturbo.com under 'Products' → 'Marine Engines & Systems' → 'Low Speed' → 'Technical Papers'.

Turbocharger Selection & Exhaust Gas By-pass

3

Turbocharger Selection

Updated turbocharger data based on the latest information from the turbocharger makers are available from the Turbocharger Selection program on www.mandieselturbo.com under 'Products' → 'Marine Engines & Systems' → 'Low Speed' → 'Turbocharger Selection'.

The MAN B&W engines are designed for the application of either MAN, ABB or Mitsubishi (MHI) turbochargers.

The turbocharger choice is made with a view to obtaining the lowest possible Specific Fuel Oil Consumption (SFOC) values at the nominal MCR by applying the best possible turbochargers.

The engines are, as standard, equipped with as few turbochargers as possible, please refer to the below mentioned 'Turbocharger Selection' programme.

In most cases one more turbocharger can be applied, than the number stated, if this is desirable due to space requirements, or for other reasons. Additional costs are to be expected.

However, we recommend the 'Turbocharger selection' programme on the Internet, which can be used to identify a list of applicable turbochargers for a specific engine layout.

For information about turbocharger arrangement and cleaning systems, see Section 15.01.

Engines	Conventional turbocharger	High efficiency turbocharger
Bore ≥50		Standard design
Bore ≤46	Standard design	

Table 3.01.01: Turbocharger optional designs, MAN B&W engines

Exhaust Gas By-pass

This section is not applicable

NOx Reduction by SCR

The NOx in the exhaust gas can be reduced with primary or secondary reduction methods. Primary methods affect the engine combustion process directly, whereas secondary methods reduce the emission level without changing the engine performance using equipment that does not form part of the engine itself.

For further information about emission control we refer to our publication:

Exhaust Gas Emission Control Today and Tomorrow

The publication is available at www.mandiesel-turbo.com under 'Products' → 'Marine Engines & Systems' → 'Low Speed' → 'Technical Papers'.

Engine with Selective Catalytic Reduction System
Option: 4 60 135

If a reduction between 50 and 98% of NO_x is required, the Selective Catalytic Reduction (SCR) system has to be applied by adding ammonia or urea to the exhaust gas before it enters a catalytic converter.

The exhaust gas must be mixed with ammonia before passing through the catalyst, and in order to encourage the chemical reaction the temperature level has to be between 300 and 400 °C. During this process the NO_x is reduced to N_2 and water.

This means that the SCR unit has to be located before the turbocharger on two-stroke engines because of their high thermal efficiency and thereby a relatively low exhaust gas temperature.

The amount of ammonia injected into the exhaust gas is controlled by a process computer and is based on the NO_x production at different loads measured during the testbed running. Fig. 3.03.01.

As the ammonia is a combustible gas, it is supplied through a double-walled pipe system, with appropriate venting and fitted with an ammonia leak detector (Fig. 3.03.01) which shows a simplified system layout of the SCR installation.

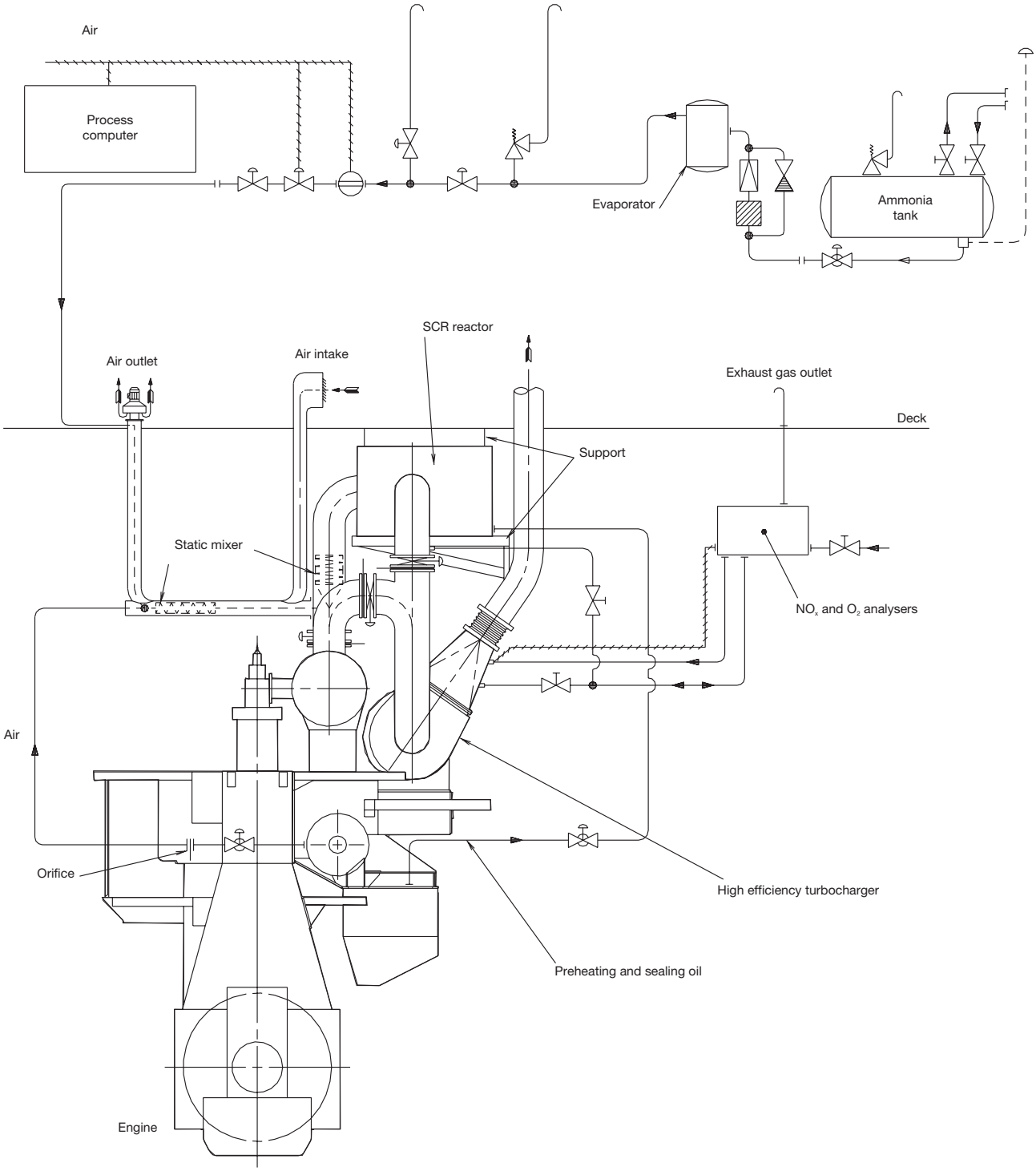

198 99 27-1.0

Fig. 3.03.01: Layout of SCR system

Electricity Production

4

Electricity Production

Introduction

Next to power for propulsion, electricity production is the largest fuel consumer on board. The electricity is produced by using one or more of the following types of machinery, either running alone or in parallel:

- Auxiliary diesel generating sets
- Main engine driven generators
- Exhaust gas- or steam driven turbo generator utilising exhaust gas waste heat (Thermo Efficiency System)
- Emergency diesel generating sets.

The machinery installed should be selected on the basis of an economic evaluation of first cost, operating costs, and the demand for man-hours for maintenance.

In the following, technical information is given regarding main engine driven generators (PTO) and the auxiliary diesel generating sets produced by MAN Diesel.

The possibility of using a turbogenerator driven by the steam produced by an exhaust gas boiler can be evaluated based on the exhaust gas data.

Power Take Off (PTO)

With a generator coupled to a Power Take Off (PTO) from the main engine, electrical power can be produced based on the main engine's low SFOC and the use of heavy fuel oil. Several standardised PTO systems are available, see Fig. 4.01.01 and the de-signations in Fig. 4.01.02:

- PTO/RCF
  (Power Take Off/Renk Constant Frequency):
  Generator giving constant frequency, based on mechanical-hydraulical speed control.

- PTO/CFE
  (Power Take Off/Constant Frequency Electrical):
  Generator giving constant frequency, based on electrical frequency control.

- PTO/GCR (Engines ≤70)
  (Power Take Off/Gear Constant Ratio):
  Generator coupled to a constant ratio step-up gear, used only for engines running at constant speed.

The DMG/CFE *(Direct Mounted Generator/Constant Frequency Electrical)* and the SMG/CFE (Shaft Mounted Generator/Constant Frequency Electrical) are special designs within the PTO/CFE group in which the generator is coupled directly to the main engine crankshaft and the intermediate shaft, respectively, without a gear. The electrical output of the generator is controlled by electrical frequency control.

Within each PTO system, several designs are available, depending on the positioning of the gear:

- BW I: (Engines ≥46)
  Gear with a vertical generator mounted onto the fore end of the diesel engine, without any connections to the ship structure.

- BW II:
  A free-standing gear mounted on the tank top and connected to the fore end of the diesel engine, with a vertical or horizontal generator.

- BW III: (Engines ≥46)
  A crankshaft gear mounted onto the fore end of the diesel engine, with a side-mounted generator without any connections to the ship structure.

- BW IV:
  A free-standing step-up gear connected to the intermediate shaft, with a horizontal generator.

The most popular of the gear based alternatives are the BW III/RCF types for plants with a fixed pitch propeller (FPP) and the BW IV/GCR for plants with a controllable pitch propeller (CPP). The BW III/RCF requires no separate seating in the ship and only little attention from the shipyard with respect to alignment.

	Alternative types and layouts of shaft generators	Design	Seating	Total efficiency (%)
PTO/RCF	1a  1b 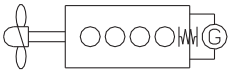	BW I/RCF	On engine (vertical generator)	88-91
PTO/RCF	2a  2b 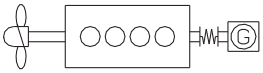	BW II/RCF	On tank top	88-91
PTO/RCF	3a  3b 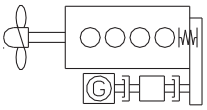	BW III/RCF	On engine	88-91
PTO/RCF	4a  4b 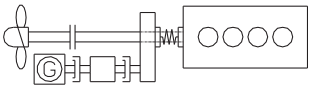	BW IV/RCF	On tank top	88-91
PTO/CFE	5a  5b 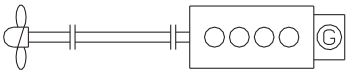	DMG/CFE	On engine	84-88
PTO/CFE	6a  6b 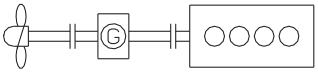	SMG/CFE	On tank top	84-88
PTO/GCR	7 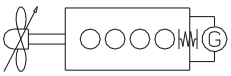	BW I/GCR	On engine (vertical generator)	92
PTO/GCR	8 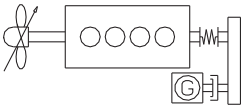	BW II/GCR	On tank top	92
PTO/GCR	9 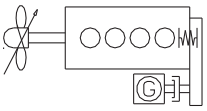	BW III/GCR	On engine	92
PTO/GCR	10 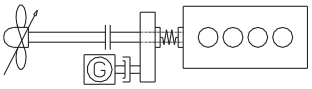	BW IV/GCR	On tank top	92

178 19 66-3.1

Fig. 4.01.01: Types of PTO

Designation of PTO

For further information, please refer to our publication titled:

Shaft Generators for MC and ME engines

The publication is available at www.mandiesel-turbo.com under 'Products' → 'Marine Engines & Systems' → 'Low Speed' → 'Technical Papers'.

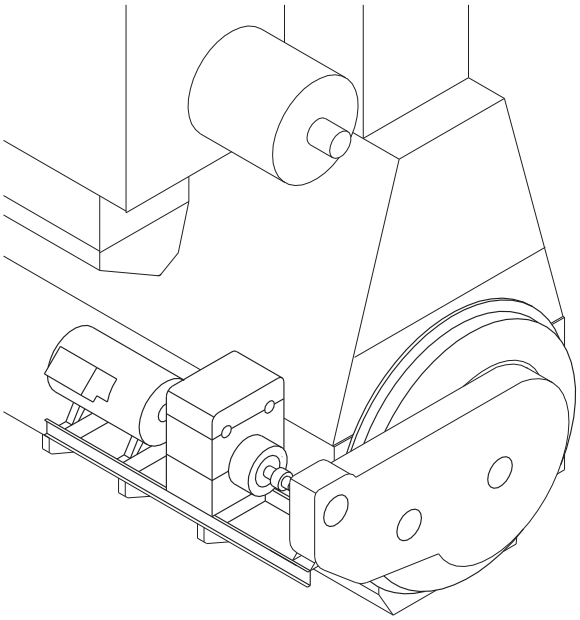

178 06 49-0.0

Power take off:

BW III S60ME-C8-GI/RCF 700-60

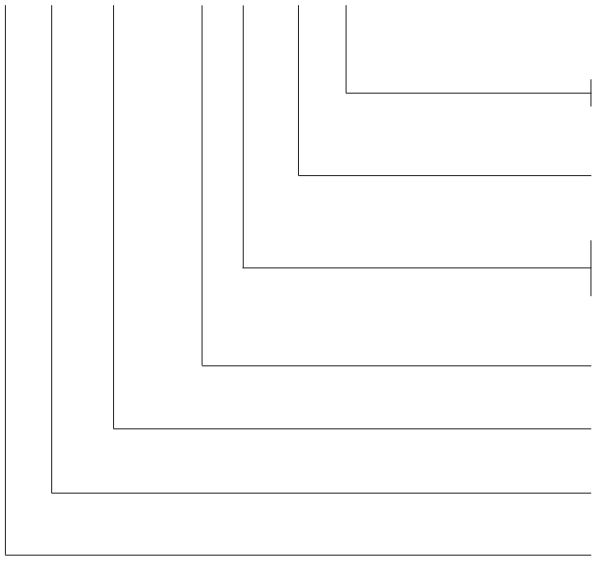

50: 50 Hz
60: 60 Hz

kW on generator terminals

RCF: Renk constant frequency unit
CFE: Electrically frequency controlled unit
GCR: Step-up gear with constant ratio

Mark version

Engine type on which it is applied

Layout of PTO: See Fig. 4.01.01

Make: MAN Diesel

178 39 55-6.0

Fig. 4.01.02: Example of designation of PTO

PTO/RCF

Side mounted generator, BWIII/RCF
(Fig. 4.01.01, Alternative 3)

The PTO/RCF generator systems have been developed in close cooperation with the German gear manufacturer RENK. A complete package solution is offered, comprising a flexible coupling, a step-up gear, an epicyclic, variable-ratio gear with built-in clutch, hydraulic pump and motor, and a standard generator, see Fig. 4.01.03.

For marine engines with controllable pitch propellers running at constant engine speed, the hydraulic system can be dispensed with, i.e. a PTO/GCR design is normally used.

Fig. 4.01.03 shows the principles of the PTO/RCF arrangement. As can be seen, a step-up gear box (called crankshaft gear) with three gear wheels is bolted directly to the frame box of the main engine. The bearings of the three gear wheels are mounted in the gear box so that the weight of the wheels is not carried by the crankshaft. In the frame box, between the crankcase and the gear drive, space is available for tuning wheel, counterweights, axial vibration damper, etc.

The first gear wheel is connected to the crankshaft via a special flexible coupling made in one piece with a tooth coupling driving the crankshaft gear, thus isolating it against torsional and axial vibrations.

By means of a simple arrangement, the shaft in the crankshaft gear carrying the first gear wheel and the female part of the toothed coupling can be moved forward, thus disconnecting the two parts of the toothed coupling.

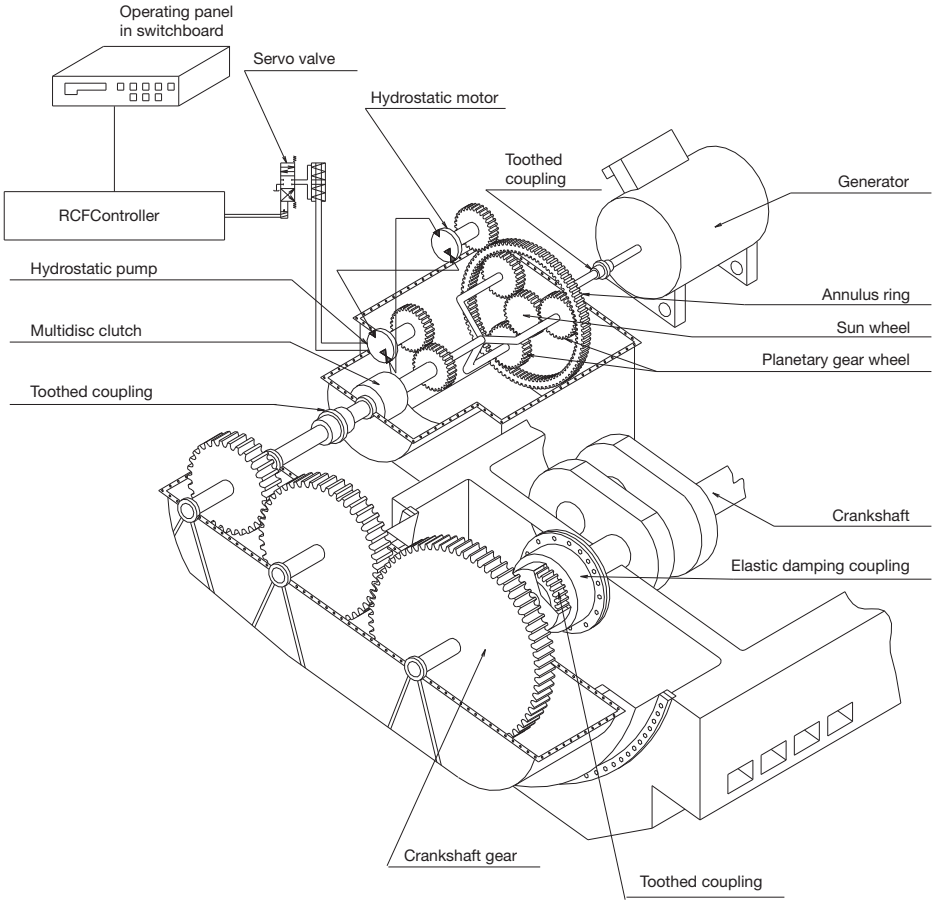

178 23 22-2.1

Fig. 4.01.03: Power take off with RENK constant frequency gear: BW III/RCF, option: 4 85 253

The power from the crankshaft gear is transferred, via a multi-disc clutch, to an epicyclic variable-ratio gear and the generator. These are mounted on a common bedplate, bolted to brackets integrated with the engine bedplate.

The BWIII/RCF unit is an epicyclic gear with a hydrostatic superposition drive. The hydrostatic input drives the annulus of the epicyclic gear in either direction of rotation, hence continuously varying the gearing ratio to keep the generator speed constant throughout an engine speed variation of 30%. In the standard layout, this is between 100% and 70% of the engine speed at specified MCR, but it can be placed in a lower range if required.

The input power to the gear is divided into two paths – one mechanical and the other hydrostatic – and the epicyclic differential combines the power of the two paths and transmits the combined power to the output shaft, connected to the generator. The gear is equipped with a hydrostatic motor driven by a pump, and controlled by an electronic control unit. This keeps the generator speed constant during single running as well as when running in parallel with other generators.

The multi-disc clutch, integrated into the gear input shaft, permits the engaging and disengaging of the epicyclic gear, and thus the generator, from the main engine during operation.

An electronic control system with a RENK controller ensures that the control signals to the main electrical switchboard are identical to those for the normal auxiliary generator sets. This applies to ships with automatic synchronising and load sharing, as well as to ships with manual switchboard operation.

Internal control circuits and interlocking functions between the epicyclic gear and the electronic control box provide automatic control of the functions necessary for the reliable operation and protection of the BWIII/RCF unit. If any monitored value exceeds the normal operation limits, a warning or an alarm is given depending upon the origin, severity and the extent of deviation from the permissible values. The cause of a warning or an alarm is shown on a digital display.

Extent of delivery for BWIII/RCF units

The delivery comprises a complete unit ready to be built-on to the main engine. Fig. 4.02.01 shows the required space and the standard electrical output range on the generator terminals.

Standard sizes of the crankshaft gears and the RCF units are designed for:
700, 1200, 1800 and 2600 kW, while the generator sizes of make A. van Kaick are:

Type DSG		440 V 1800 kVA	60 Hz r/min kW	380 V 1500 kVA	50 Hz r/min kW
62	M2-4	707	566	627	501
62	L1-4	855	684	761	609
62	L2-4	1,056	845	940	752
74	M1-4	1,271	1,017	1,137	909
74	M2-4	1,432	1,146	1,280	1,024
74	L1-4	1,651	1,321	1,468	1,174
74	L2-4	1,924	1,539	1,709	1,368
86	K1-4	1,942	1,554	1,844	1,475
86	M1-4	2,345	1,876	2,148	1,718
86	L2-4	2,792	2,234	2,542	2,033
99	K1-4	3,222	2,578	2,989	2,391

178 34 89-3.1

In the event that a larger generator is required, please contact MAN Diesel.

If a main engine speed other than the nominal is required as a basis for the PTO operation, it must be taken into consideration when determining the ratio of the crankshaft gear. However, it has no influence on the space required for the gears and the generator.

The PTO can be operated as a motor (PTI) as well as a generator by making some minor modifications.

Yard deliveries are:

1. Cooling water pipes to the built-on lubricating oil cooling system, including the valves.

2. Electrical power supply to the lubricating oil stand-by pump built on to the RCF unit.

3. Wiring between the generator and the operator control panel in the switchboard.

4. An external permanent lubricating oil filling-up connection can be established in connection with the RCF unit. The system is shown in Fig. 4.03.03 'Lubricating oil system for RCF gear'. The dosage tank and the pertaining piping are to be delivered by the yard. The size of the dosage tank is stated in the table for RCF gear in 'Necessary capacities for PTO/RCF' (Fig. 4.03.02).

The necessary preparations to be made on the engine are specified in Figs. 4.03.01a and 4.03.01b.

Additional capacities required for BWIII/RCF

The capacities stated in the 'List of capacities' for the main engine in question are to be increased by the additional capacities for the crankshaft gear and the RCF gear stated in Fig. 4.03.02.

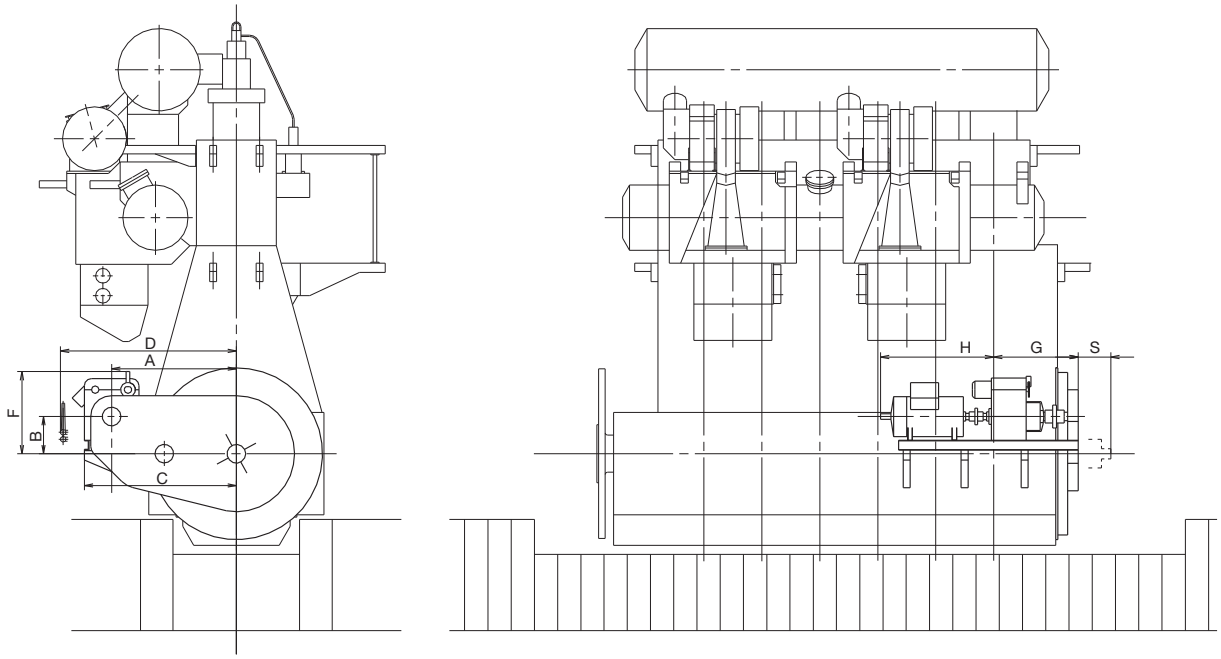

178 36 29-6.1

	kW generator			
	700 kW	**1200 kW**	**1800 kW**	**2600 kW**
A	3,073	3,073	3,213	3,213
B	633	633	633	633
C	3,733	3,733	4,013	4,013
D	4,130	4,130	4,410	4,410
F	1,683	1,803	1,923	2,033
G	2,620	2,620	3,000	3,000
H	1,925	2,427	2,812	4,142
S	400	460	550	640
	System mass (kg) with generator:			
	26,250	30,500	42,600	58,550
	System mass (kg) without generator:			
	24,250	27,850	38,300	53,350

The stated kW at the generator terminals is available between 70% and 100% of the engine speed at specified MCR

Space requirements have to be investigated case by case on plants with 2600 kW generator.

Dimension H: This is only valid for A. van Kaick generator type DSG, enclosure IP23, frequency = 60 Hz, speed = 1800 r/min

Fig. 4.02.01: Space requirement for side mounted generator PTO/RCF type BWIII S70-C/RCF

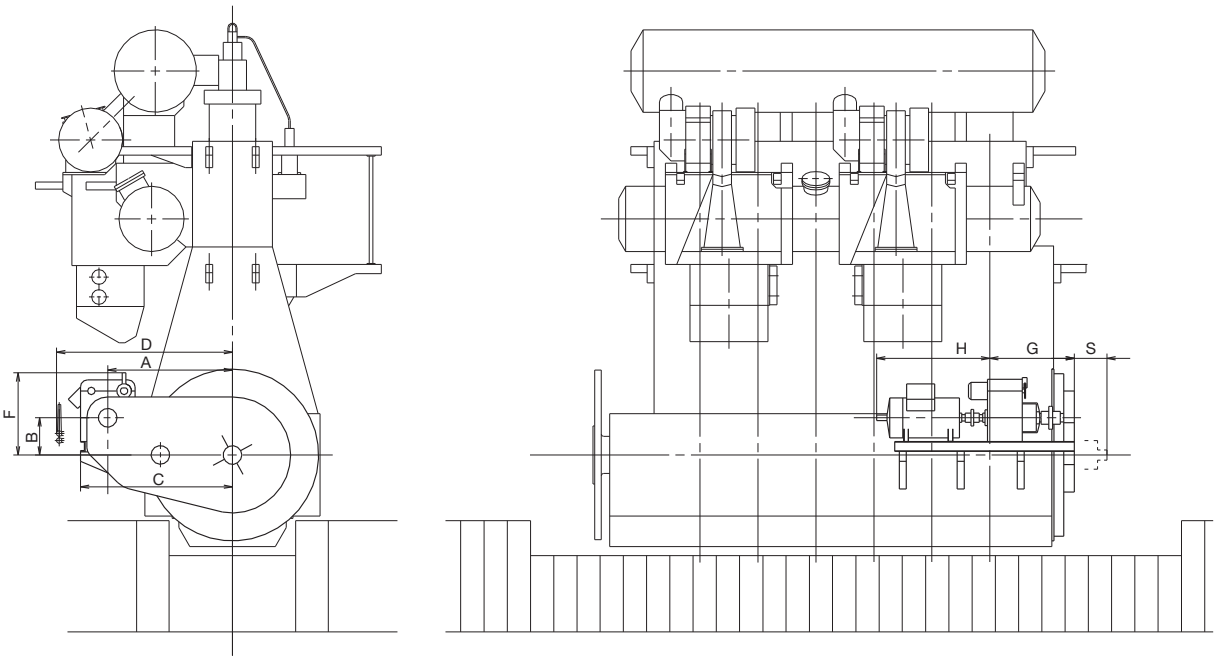

178 36 29-6.1

	kW generator			
	700 kW	**1200 kW**	**1800 kW**	**2600 kW**
A	2,867	2,867	3,007	3,007
B	632	632	632	632
C	3,527	3,527	3,807	3,807
D	3,923	3,923	4,203	4,203
F	1,682	1,802	1,922	2,032
G	2,470	2,470	2,830	2,830
H	2,028	2,530	2,915	4,235
S	390	450	530	620
	System mass (kg) with generator:			
	23,750	27,500	39,100	52,550
	System mass (kg) without generator:			
	21,750	24,850	34,800	47,350

The stated kW at the generator terminals is available between 70% and 100% of the engine speed at specified MCR

Space requirements have to be investigated case by case on plants with 2600 kW generator.

Dimension H: This is only valid for A. van Kaick generator type DSG, enclosure IP23, frequency = 60 Hz, speed = 1800 r/min

Fig. 4.02.01: Space requirement for side mounted generator PTO/RCF type BWIII S65-C/RCF

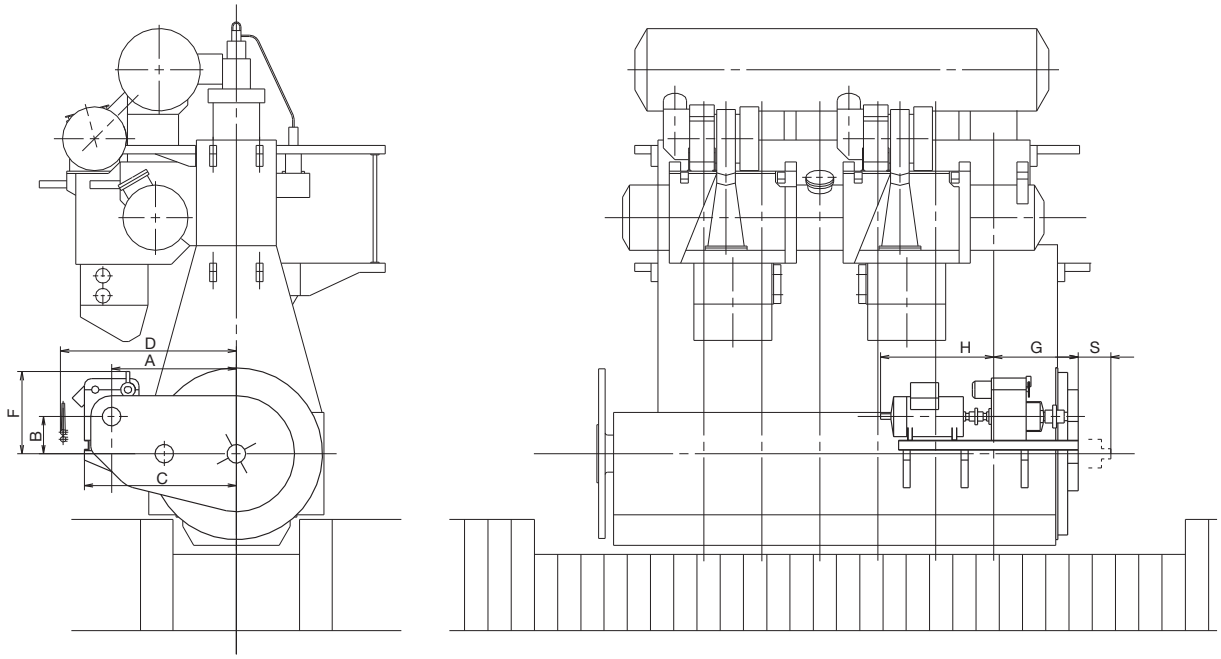

178 36 29-6.1

	kW generator			
	700 kW	**1200 kW**	**1800 kW**	**2600 kW**
A	2,684	2,684	2,824	2,824
B	632	632	632	632
C	3,344	3,344	3,624	3,624
D	3,740	3,740	4,020	4,020
F	1,682	1,802	1,922	2,032
G	2,364	2,364	2,724	2,724
H	2,134	2,636	3,021	4,341
S	390	450	530	620
	System mass (kg) with generator:			
	23,750	27,500	39,100	52,550
	System mass (kg) without generator:			
	21,750	24,850	34,800	47,350

The stated kW at the generator terminals is available between 70% and 100% of the engine speed at specified MCR

Space requirements have to be investigated case by case on plants with 2600 kW generator.

Dimension H: This is only valid for A. van Kaick generator type DSG, enclosure IP23, frequency = 60 Hz, speed = 1800 r/min

Fig. 4.02.01: Space requirement for side mounted generator PTO/RCF type BWIII S60-C/RCF

Engine preparations for PTO

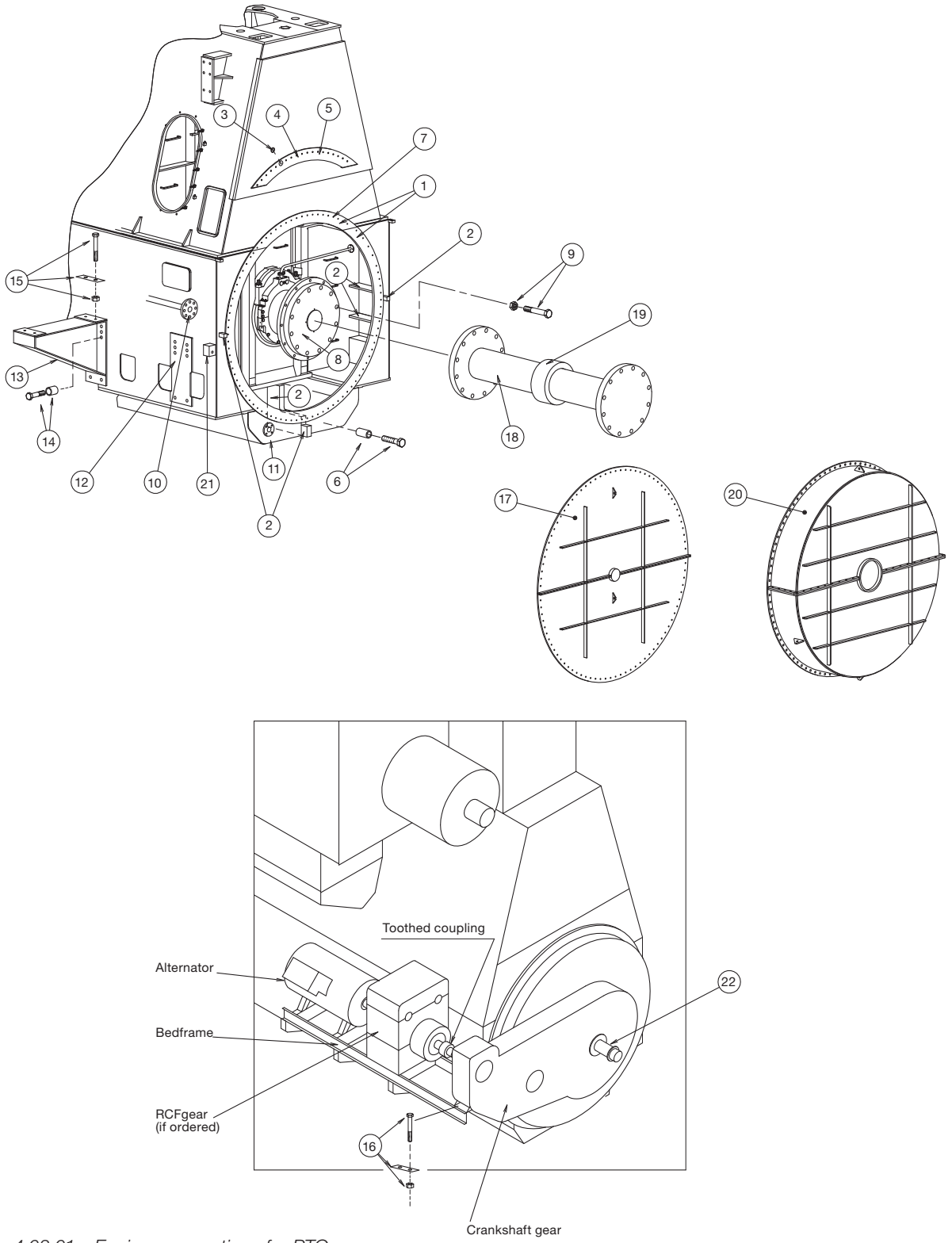

Fig. 4.03.01a: Engine preparations for PTO

178 57 15-7.0

Pos.

1 Special face on bedplate and frame box
2 Ribs and brackets for supporting the face and machined blocks for alignment of gear or stator housing
3 Machined washers placed on frame box part of face to ensure that it is flush with the face on the bedplate
4 Rubber gasket placed on frame box part of face
5 Shim placed on frame box part of face to ensure that it is flush with the face of the bedplate
6 Distance tubes and long bolts
7 Threaded hole size, number and size of spring pins and bolts to be made in agreement with PTO maker
8 Flange of crankshaft, normally the standard execution can be used
9 Studs and nuts for crankshaft flange
10 Free flange end at lubricating oil inlet pipe (incl. blank flange)
11 Oil outlet flange welded to bedplate (incl. blank flange)
12 Face for brackets
13 Brackets
14 Studs for mounting the brackets
15 Studs, nuts and shims for mounting of RCF-/generator unit on the brackets
16 Shims, studs and nuts for connection between crankshaft gear and RCF-/generator unit
17 Engine cover with connecting bolts to bedplate/frame box to be used for shop test without PTO
18 Intermediate shaft between crankshaft and PTO
19 Oil sealing for intermediate shaft
20 Engine cover with hole for intermediate shaft and connecting bolts to bedplate/frame box
21 Plug box for electronic measuring instrument for checking condition of axial vibration damper
22 Tacho encoder for ME control system or Alpha lubrication system on MC engine
23 Tacho trigger ring for ME control system or Alpha lubrication system on MC engine

Pos. no:	1	2	3	4	5	6	7	8	9	10	11	12	13	14	15	16	17	18	19	20	21	22	23
BWIII/RCF	A	A	A	A		B		A	B	A	A	A	A	A	B	B	A				A	A	
BWIII/CFE	A	A	A	A		B		A	B	A	A	A	A	A	B	B	A				A	A	
BWII/RCF								A	A									A	A	A	A		A
BWII/CFE								A	A									A	A	A	A		A
BWI/RCF	A	A	A	A		B		A	B								A				A		A
BWI/CFE	A	A	A	A		B		A	B	A	A						A				A		A
DMG/CFE	A	A			A	B	C	A	B								A				A		A

A: Preparations to be carried out by engine builder
B: Parts supplied by PTO-maker
C: See text of pos. no.

178 89 34-2.0

Fig. 4.03.01b: Engine preparations for PTO

Crankshaft gear lubricated from the main engine lubricating oil system

The figures are to be added to the main engine capacity list:

Nominal output of generator	kW	700	1,200	1,800	2,600
Lubricating oil flow	m^3/h	4.1	4.1	4.9	6.2
Heat dissipation	kW	12.1	20.8	31.1	45.0

RCF gear with separate lubricating oil system:

Nominal output of generator	kW	700	1,200	1,800	2,600
Cooling water quantity	m^3/h	14.1	22.1	30.0	39.0
Heat dissipation	kW	55	92	134	180
El. power for oil pump	kW	11.0	15.0	18.0	21.0
Dosage tank capacity	m^3	0.40	0.51	0.69	0.95
El. power for Renk-controller		24V DC ± 10%, 8 amp			

From main engine:
Design lube oil pressure: 2.25 bar
Lube oil pressure at crankshaft gear: min. 1 bar
Lube oil working temperature: 50 °C
Lube oil type: SAE 30

Cooling water inlet temperature: 36 °C
Pressure drop across cooler: approximately 0.5 bar
Fill pipe for lube oil system store tank (~ø32)
Drain pipe to lube oil system drain tank (~ø40)
Electric cable between Renk terminal at gearbox and operator control panel in switchboard: Cable type FMGCG 19 x 2 x 0.5

178 33 85-0.0

Fig. 4.03.02: Necessary capacities for PTO/RCF, BW III/RCF system

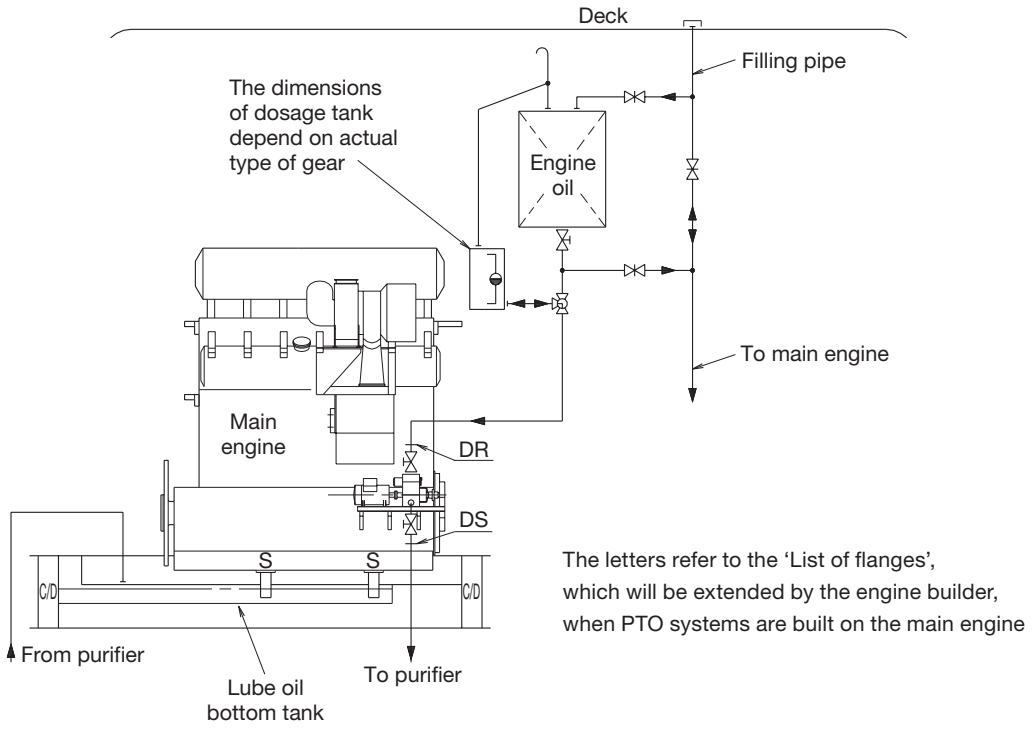

178 25 23-5.0

Fig. 4.03.03: Lubricating oil system for RCF gear

DMG/CFE Generators
Option: 4 85 259

Fig. 4.01.01 alternative 5, shows the DMG/CFE (Direct Mounted Generator/Constant Frequency Electrical) which is a low speed generator with its rotor mounted directly on the crankshaft and its stator bolted on to the frame box as shown in Figs. 4.03.04 and 4.03.05.

The DMG/CFE is separated from the crankcase by a plate and a labyrinth stuffing box.

The DMG/CFE system has been developed in co-operation with the German generator manufacturers Siemens and AEG, but similar types of generator can be supplied by others, e.g. Fuji, Taiyo and Nishishiba in Japan.

For generators in the normal output range, the mass of the rotor can normally be carried by the foremost main bearing without exceeding the permissible bearing load (see Fig. 4.03.05), but this must be checked by the engine manufacturer in each case.

If the permissible load on the foremost main bearing is exceeded, e.g. because a tuning wheel is needed, this does not preclude the use of a DMG/CFE.

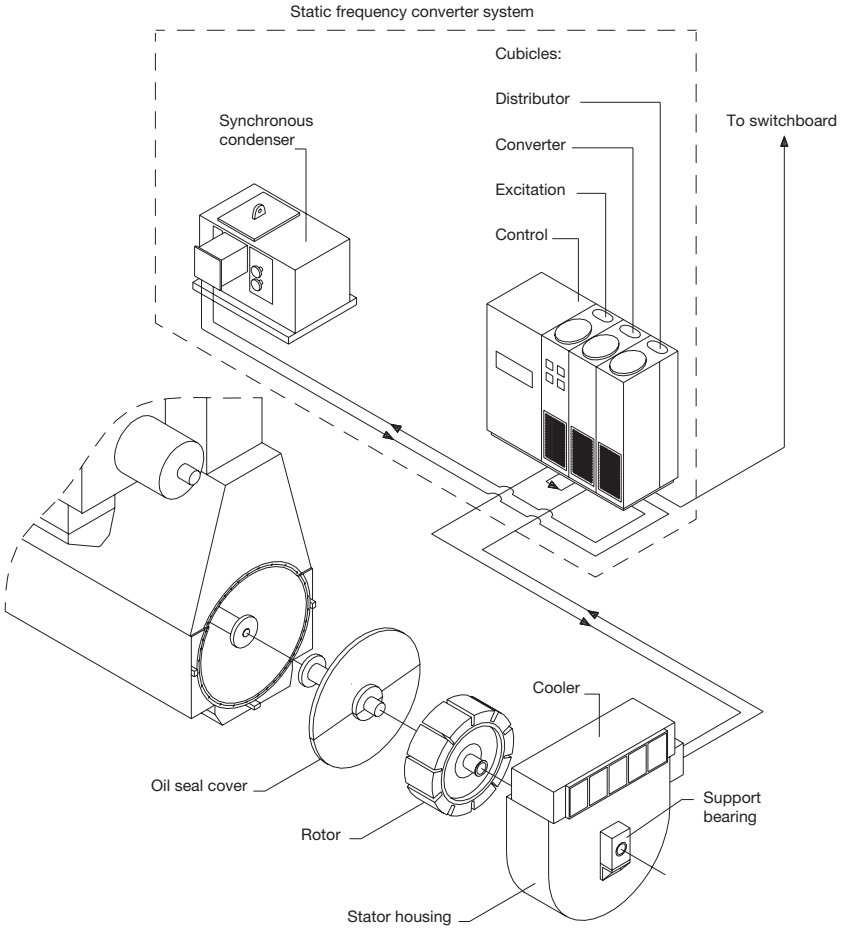

178 06 73-3.1

Fig. 4.03.04: Standard engine, with direct mounted generator (DMG/CFE)

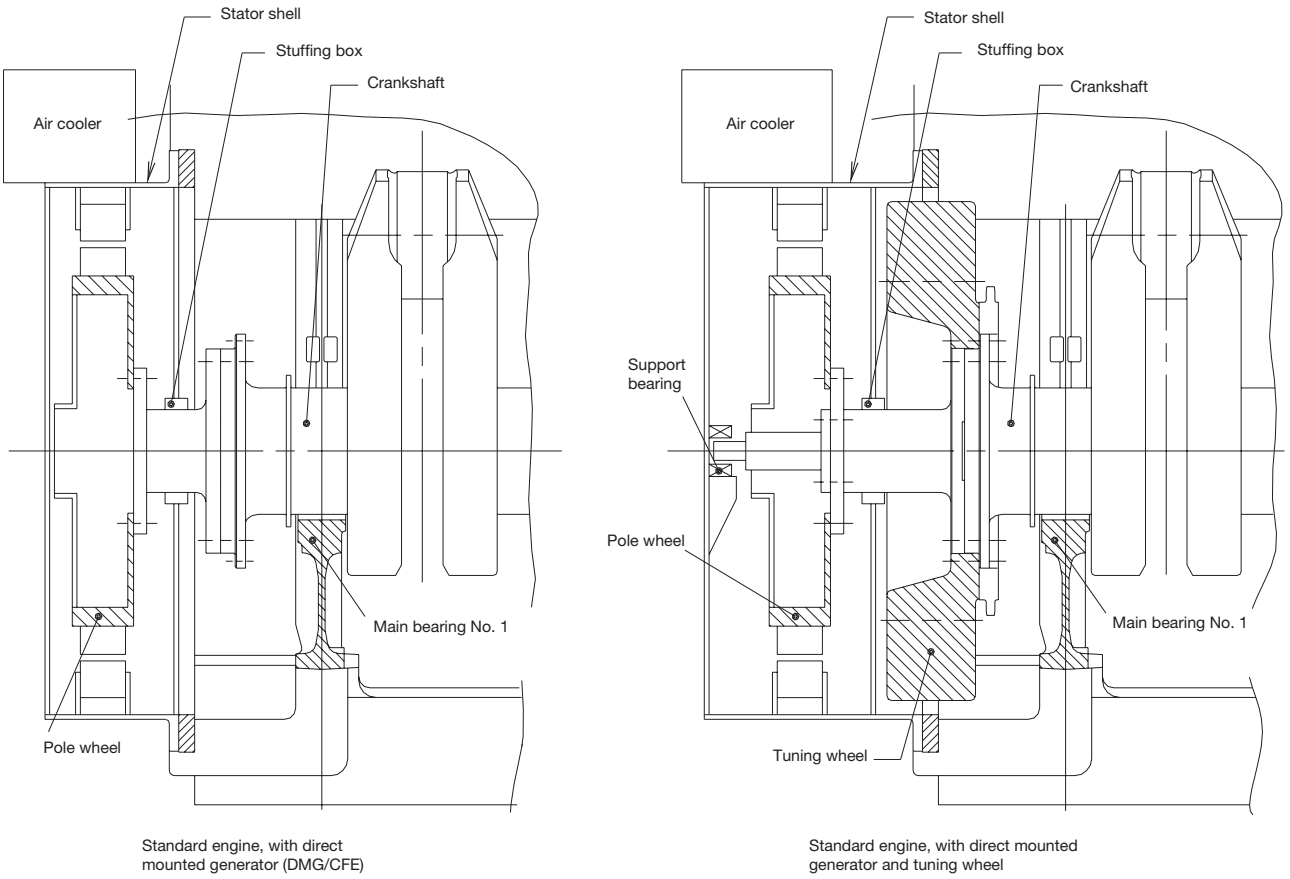

Fig. 4.03.05: Standard engine, with direct mounted generator and tuning wheel

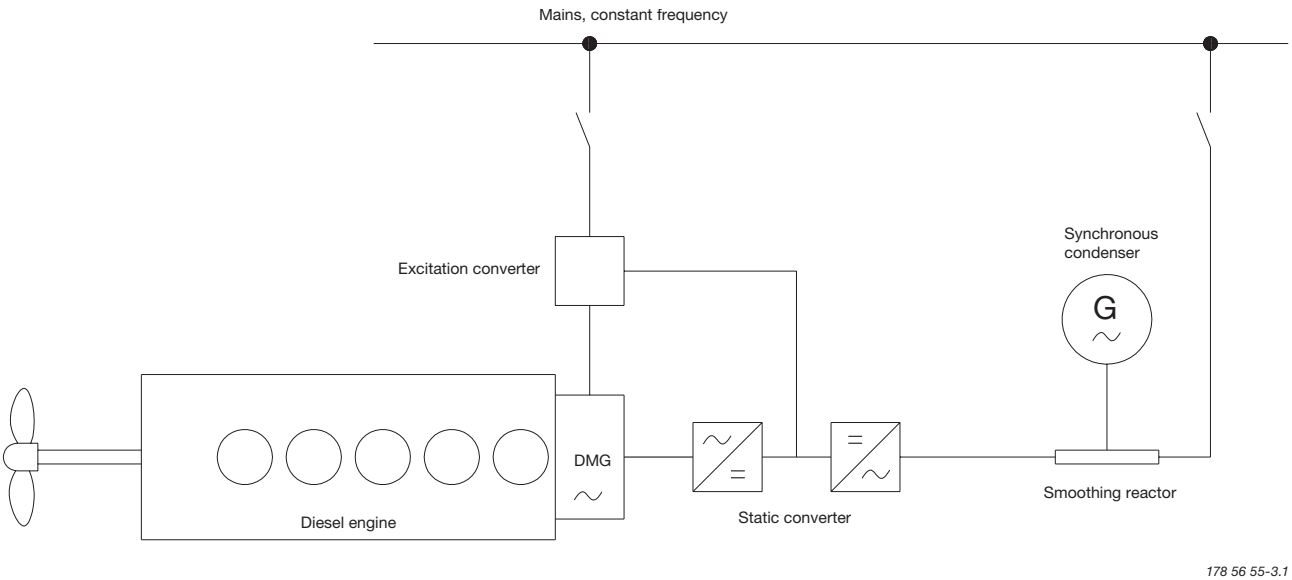

Fig. 4.03.06: Diagram of DMG/CFE with static converter

In such a case, the problem is solved by installing a small, elastically supported bearing in front of the stator housing, as shown in Fig. 4.03.05.

As the DMG type is directly connected to the crankshaft, it has a very low rotational speed and, consequently, the electric output current has a low frequency – normally of the order of 15 Hz.

Therefore, it is necessary to use a static frequency converter between the DMG and the main switchboard. The DMG/CFE is, as standard, laid out for operation with full output between 100% and 70% and with reduced output between 70% and 50% of the engine speed at specified MCR.

Static converter

The static frequency converter system (see Fig. 4.03.06) consists of a static part, i.e. thyristors and control equipment, and a rotary electric machine.

The DMG produces a three-phase alternating current with a low frequency, which varies in accordance with the main engine speed. This alternating current is rectified and led to a thyristor inverter producing a three-phase alternating current with constant frequency.

Since the frequency converter system uses a DC intermediate link, no reactive power can be supplied to the electric mains. To supply this reactive power, a synchronous condenser is used. The synchronous condenser consists of an ordinary synchronous generator coupled to the electric mains.

Extent of delivery for DMG/CFE units

The delivery extent is a generator fully built-on to the main engine including the synchronous condenser unit and the static converter cubicles which are to be installed in the engine room.

The DMG/CFE can, with a small modification, be operated both as a generator and as a motor (PTI).

Yard deliveries are:

1. Installation, i.e. seating in the ship for the synchronous condenser unit and for the static converter cubicles

2. Cooling water pipes to the generator if water cooling is applied

3. Cabling.

The necessary preparations to be made on the engine are specified in Figs. 4.03.01a and 4.03.01b.

SMG/CFE Generators

The PTO SMG/CFE (see Fig. 4.01.01 alternative 6) has the same working principle as the PTO DMG/CFE, but instead of being located on the front end of the engine, the alternator is installed aft of the engine, with the rotor integrated on the intermediate shaft.

In addition to the yard deliveries mentioned for the PTO DMG/CFE, the shipyard must also provide the foundation for the stator housing in the case of the PTO SMG/CFE.

The engine needs no preparation for the installation of this PTO system.

PTO type: BW II/GCR

Power Take Off/Gear Constant Ratio

The PTO system type BWII/GCR illustrated in Fig. 4.01.01 alternative 5 can generate electrical power on board ships equipped with a controllable pitch propeller, running at constant speed.

The PTO unit is mounted on the tank top at the fore end of the engine see Fig. 4.04.01. The PTO generator is activated at sea, taking over the electrical power production on board when the main engine speed has stabilised at a level corresponding to the generator frequency required on board.

The installation length in front of the engine, and thus the engine room length requirement, naturally exceeds the length of the engine aft end mounted shaft generator arrangements. However, there is some scope for limiting the space requirement, depending on the configuration chosen.

PTO type: BW IV/GCR

Power Take Off/Gear Constant Ratio

The shaft generator system, type PTO BW IV/GCR, installed in the shaft line (Fig. 4.01.01 alternative 6) can generate power on board ships equipped with a controllable pitch propeller running at constant speed.

The PTO system can be delivered as a tunnel gear with hollow flexible coupling or, alternatively, as a generator step-up gear with thrust bearing and flexible coupling integrated in the shaft line.

The main engine needs no special preparation for mounting these types of PTO systems as they are connected to the intermediate shaft.

The PTO system installed in the shaft line can also be installed on ships equipped with a fixed pitch propeller or controllable pitch propeller running in

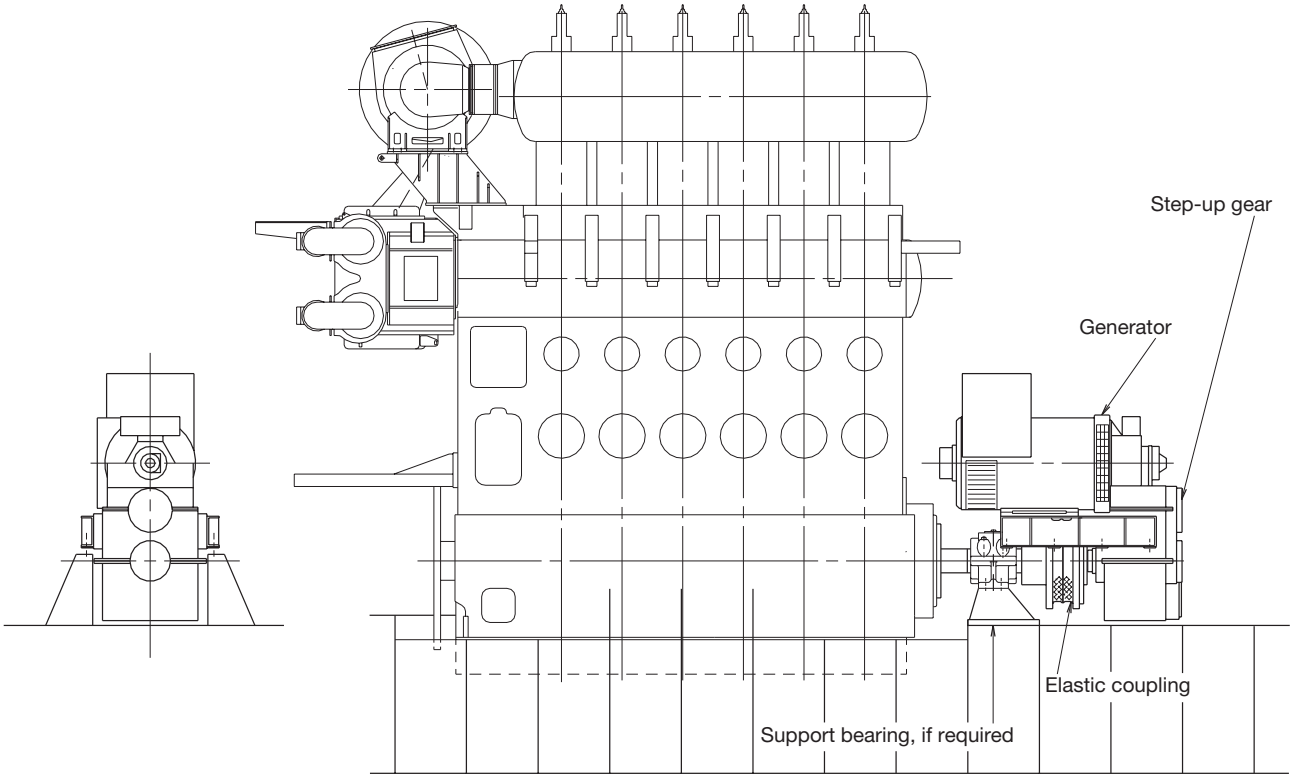

178 18 22-5.0

Fig. 4.04.01: Generic outline of Power Take Off (PTO) BW II/GCR

combinator mode. This will, however, require an additional RENK Constant Frequency gear (Fig. 4.01.01 alternative 2) or additional electrical equipment for maintaining the constant frequency of the generated electric power.

Tunnel gear with hollow flexible coupling

This PTO system is normally installed on ships with a minor electrical power take off load compared to the propulsion power, up to approximately 25% of the engine power.

The hollow flexible coupling is only to be dimensioned for the maximum electrical load of the power take off system and this gives an economic advantage for minor power take off loads compared to the system with an ordinary flexible coupling integrated in the shaft line.

The hollow flexible coupling consists of flexible segments and connecting pieces, which allow replacement of the coupling segments without dismounting the shaft line, see Fig. 4.04.02.

Generator step-up gear and flexible coupling integrated in the shaft line

For higher power take off loads, a generator step-up gear and flexible coupling integrated in the shaft line may be chosen due to first costs of gear and coupling.

The flexible coupling integrated in the shaft line will transfer the total engine load for both propulsion and electrical power and must be dimensioned accordingly.

The flexible coupling cannot transfer the thrust from the propeller and it is, therefore, necessary to make the gear-box with an integrated thrust bearing.

This type of PTO system is typically installed on ships with large electrical power consumption, e.g. shuttle tankers.

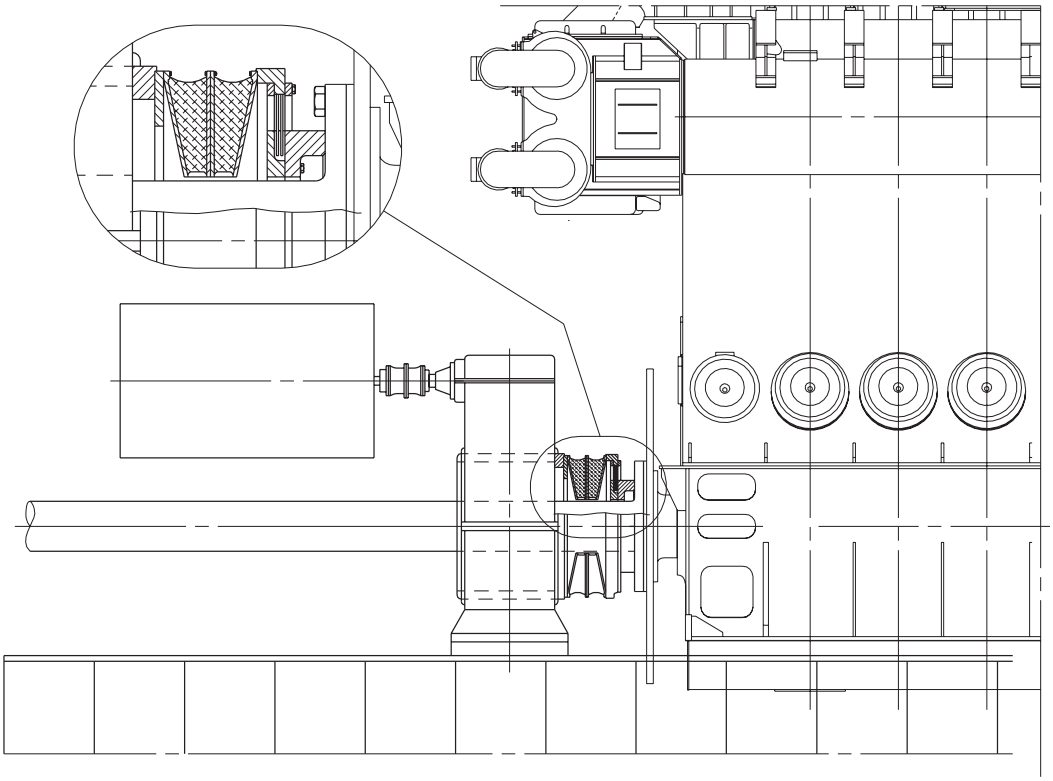

178 18 25-0.1

Fig. 4.04.02: Generic outline of BW IV/GCR, tunnel gear

Auxiliary Propulsion System/Take Home System

From time to time an Auxiliary Propulsion System/ Take Home System capable of driving the CP propeller by using the shaft generator as an electric motor is requested.

MAN Diesel can offer a solution where the CP propeller is driven by the alternator via a two-speed tunnel gear box. The electric power is produced by a number of GenSets. The main engine is disengaged by a clutch (RENK KAZ) made as an integral part of the shafting. The clutch is installed between the tunnel gear box and the main engine, and conical bolts are used to connect and disconnect the main engine and the shafting. See Figure 4.04.03.

A thrust bearing, which transfers the auxiliary propulsion propeller thrust to the engine thrust bearing when the clutch is disengaged, is built into the RENK KAZ clutch. When the clutch is engaged, the thrust is transferred statically to the engine thrust bearing through the thrust bearing built into the clutch.

To obtain high propeller efficiency in the auxiliary propulsion mode, and thus also to minimise the auxiliary power required, a two-speed tunnel gear, which provides lower propeller speed in the auxiliary propulsion mode, is used.

The two-speed tunnel gear box is made with a friction clutch which allows the propeller to be clutched in at full alternator/motor speed where the full torque is available. The alternator/motor is started in the de-clutched condition with a start transformer.

The system can quickly establish auxiliary propulsion from the engine control room and/or bridge, even with unmanned engine room.

Re-establishment of normal operation requires attendance in the engine room and can be done within a few minutes.

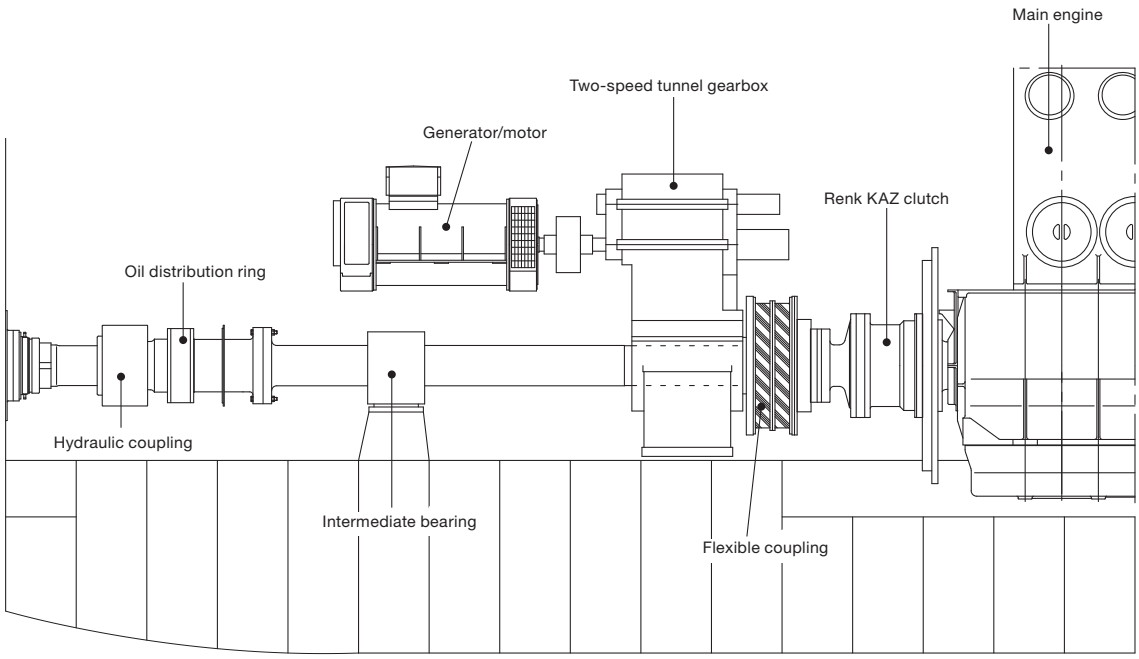

178 57 16-9.0

Fig. 4.04.03: Auxiliary propulsion system

Waste Heat Recovery Systems (WHR)

Due to the increasing fuel prices seen from 2004 and onwards many shipowners have shown interest in efficiency improvements of the power systems on board their ships. A modern two-stroke diesel engine has one of the highest thermal efficiencies of today's power systems, but even this high efficiency can be improved by combining the diesel engine with other power systems.

One of the possibilities for improving the efficiency is to install one or more systems utilising some of the energy in the exhaust gas after the two-stroke engine, which in MAN Diesel terms is designated as WHR (Waste Heat Recovery Systems).

WHR can be divided into different types of subsystems, depending on how the system utilises the exhaust gas energy. Choosing the right system for a specific project depends on the electricity demand on board the ship and the acceptable first cost for the complete installation. MAN Diesel uses the following designations for the current systems on the market:

- PTG (Power Turbine Generator):
  An exhaust gas driven turbine connected to a generator via a gearbox.

- STG (Steam Turbine Generator):
  A steam driven turbine connected to a generator via a gearbox. The steam is produced in a large exhaust gas driven boiler installed on the main engine exhaust gas piping system.

- Combined Turbines:
  A combination of the two first systems. The arrangement is often that the power turbine is connected to the steam turbine via a gearbox and the steam turbine is further connected to a large generator, which absorbs the power from both turbines.

The PTG system will produce power equivalent to approx. 4% of the main engine SMCR, when the engine is running at SMCR. For the STG system this value is between 5 and 7% depending on the system installed. When combining the two systems, a power output equivalent to 10% of the main engine's SMCR is possible, when the engine is running at SMCR.

As the electrical power produced by the system needs to be used on board the ship, specifying the correct size system for a specific project must be considered carefully. In cases where the electrical power consumption on board the ship is low, a smaller system than possible for the engine type may be considered. Another possibility is to install a shaft generator/motor to absorb excess power produced by the WHR. The main engine will then be unloaded, or it will be possible to increase the speed of the ship, without penalising the fuelbill.

Because the energy from WHR is taken from the exhaust gas of the main engine, this power produced can be considered as "free". In reality, the main engine SFOC will increase slightly, but the gain in electricity production on board the ship will far surpass this increase in SFOC. As an example, the SFOC of the combined output of both the engine and the system with power and steam turbine can be calculated to be as low as 155 g/kWh (ref. LCV 42,700 kJ/kg).

Power Turbine Generator (PTG)

The power turbines of today are based on the different turbocharger suppliers' newest designs of high-efficiency turbochargers, i.e. MAN Diesel's TCA, ABB's TPL and Mitsubishi's MA turbochargers.

The power turbine basically is the turbine side of a normal high-efficient turbocharger with some modifications to the bearings and the turbine shaft. This is in order to be able to connect it to a gearbox instead of the normal connection to the compressor side. The power turbine will be installed on a separate exhaust gas pipe from the exhaust gas receiver, which bypasses the turbochargers.

The performance of the PTG and the main engine will depend on a careful matching of the engine turbochargers and the power turbine, for which reason the turbocharger/s and the power turbine need to be from the same manufacturer. In Fig. 4.05.01, a simple diagram of the PTG arrangement is shown. The quick-opening and quick-closing valves are used in the event of a blackout of the grid, in which case the exhaust gas will bypass the power turbine.

The newest generation of high-efficiency turbochargers allows bypassing of some of the main engine exhaust gas, thereby creating a new balance of the air flow through the engine. In this way, it is possible to extract power from the power turbine equivalent to 4% of the main engine's SMCR, when the engine is running at SMCR.

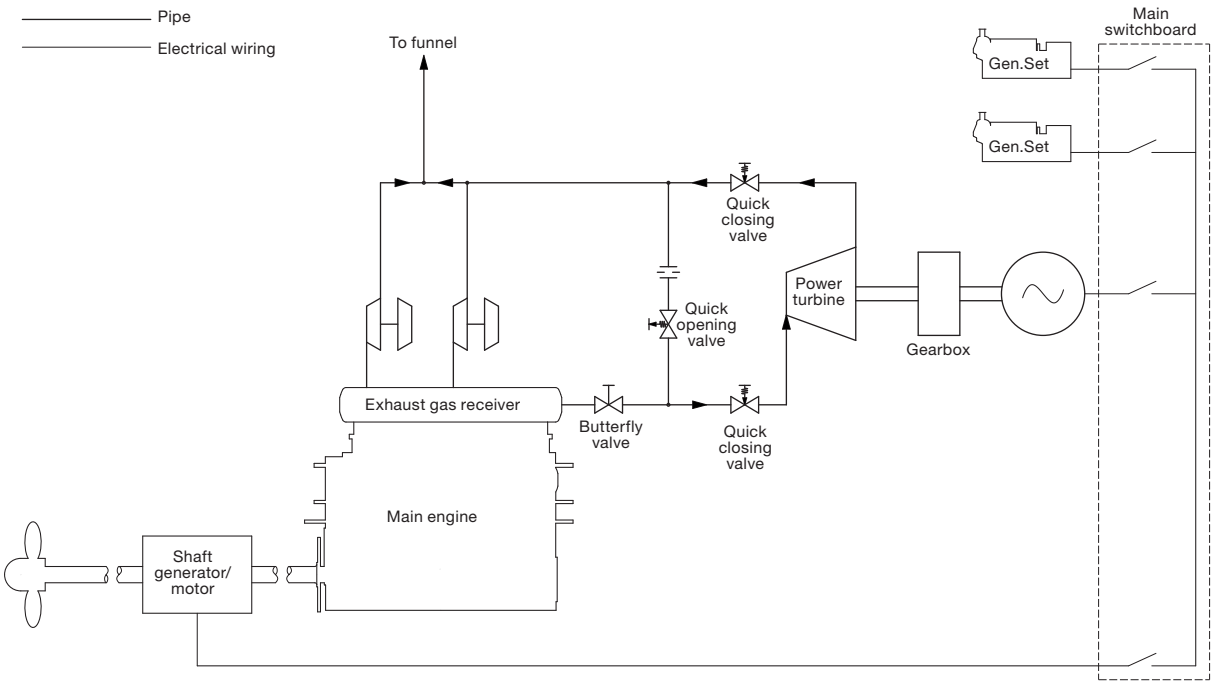

178 57 09-8.0

Fig. 4.05.01: PTG diagram

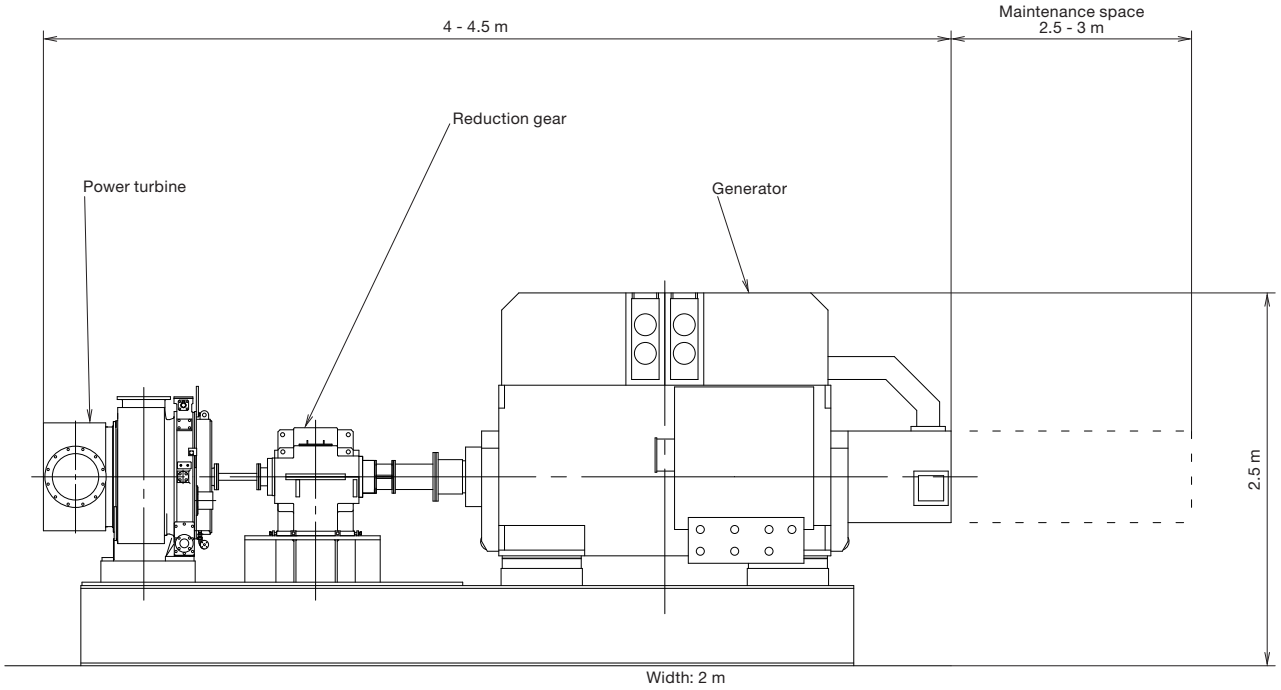

Fig. 4.05.02: The size of a 1,000 kW PTG system depending on the supplier

Steam Turbine Generator (STG)

In most cases the exhaust gas pipe system of the main engine is equipped with a boiler system. With this boiler, some of the energy in the exhaust gas is utilised to produce steam for use on board the ship.

If the engine is WHR matched, the exhaust gas temperature will be between 50°C and 65°C higher than on a conventional engine, which makes it possible to install a larger boiler system and, thereby, produce more steam. In short, MAN Diesel designates this system STG. Fig. 4.05.03 shows an example of the arrangement of STG.

For WHR matching the engine, a bypass is installed to increase the temperature of the exhaust gas and improve the boiler output.

The extra steam produced in the boiler can be utilised in a steam turbine, which can be used to drive a generator for power production on board the ship. An STG system could be arranged as shown in Fig. 4.05.04, where a typical system size is shown with the outline dimensions.

The steam turbine can either be a single or dual pressure turbine, depending on the size of the system. Steam pressure for a single pressure system is 7 to 10 bara, and for the dual pressure system the high-pressure cycle will be 9 to 10 bara and the low-pressure cycle will be 4 to 5 bara.

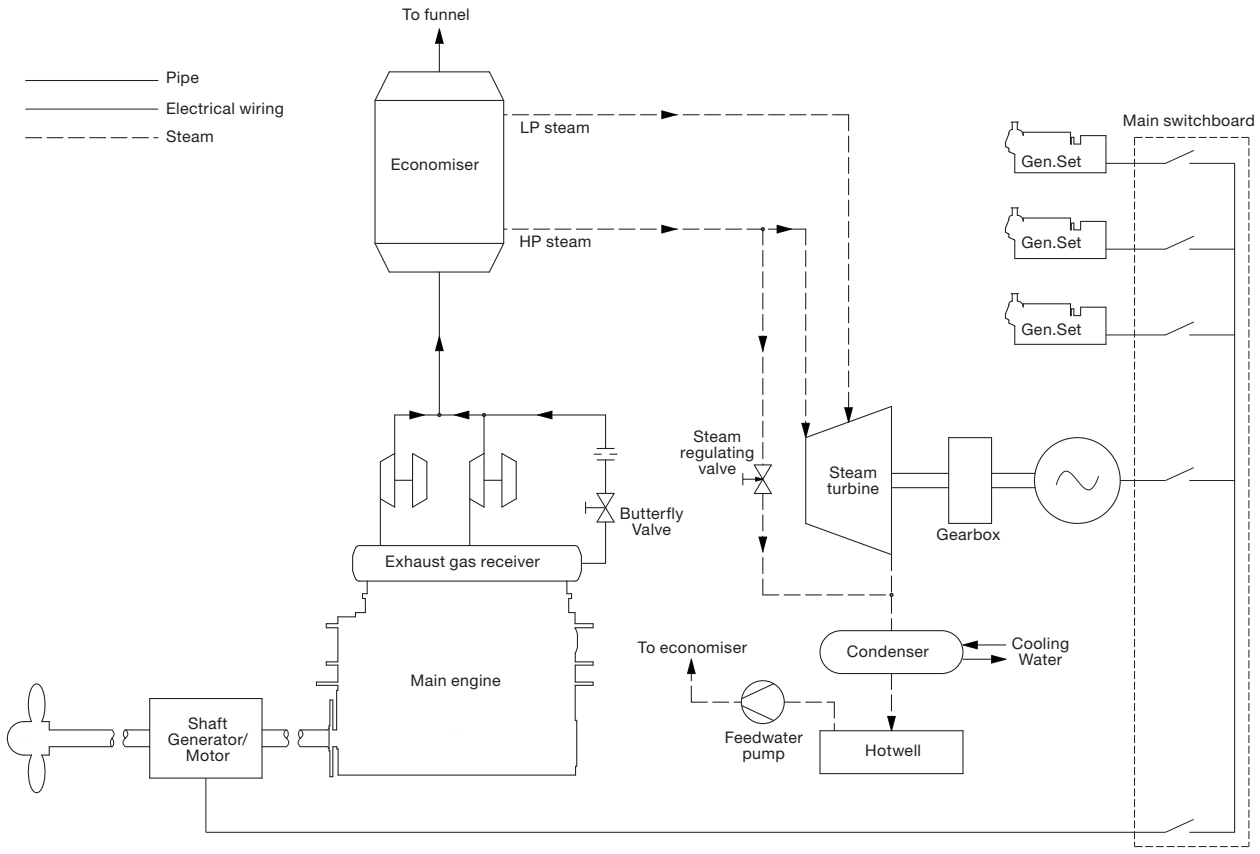

178 56 96-4.0

Fig. 4.05.03: Steam diagram

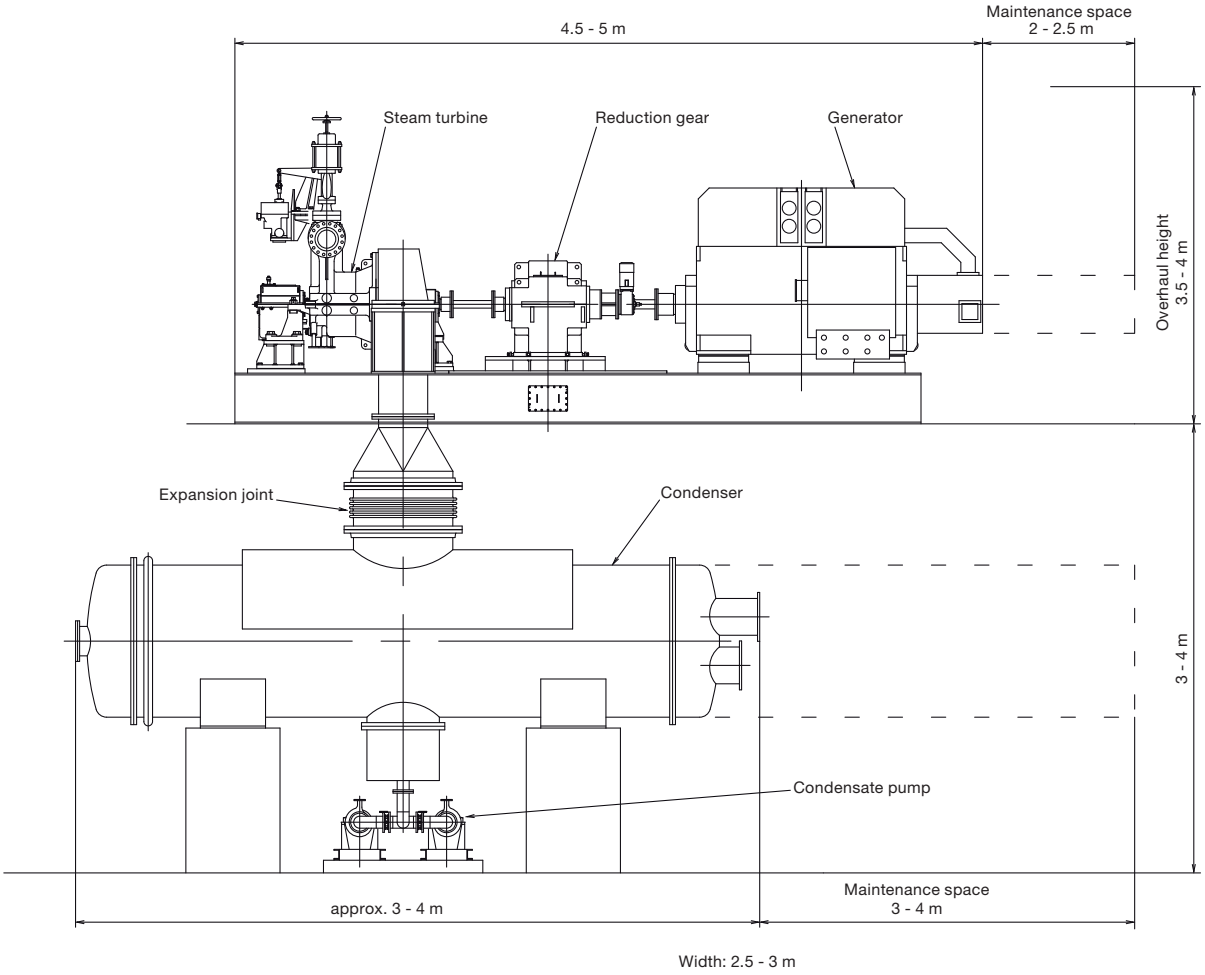

178 57 02-5.0

Fig. 4.05.04: Typical system size for 1,000 kW STG system

Combined Turbines

Because the installation of the power turbine also will result in an increase of the exhaust gas temperature after the turbochargers, it is possible to install both the power turbine, the larger boiler and steam turbine on the same engine. This way, the energy from the exhaust gas is utilised in the best way possible by today's components.

When looking at the system with both power and steam turbine, quite often the power turbine and the steam turbine are connected to the same generator. In some cases, it is also possible to have each turbine on a separate generator. This is, however, mostly seen on stationary engines, where the frequency control is simpler because of the large grid to which the generator is coupled.

For marine installations the power turbine is, in most cases, connected to the steam turbine via a gearbox, and the steam turbine is then connected to the generator. It is also possible to have a generator with connections in both ends, and then connect the power turbine in one end and the steam turbine in the other. In both cases control of one generator only is needed.

For dimensions of a typical system see Fig. 4.05.06.

As mentioned, the systems with steam turbines require a larger boiler to be installed. The size of the boiler system will be roughly three to four times the size of an ordinary boiler system, but the actual boiler size has to be calculated from case to case.

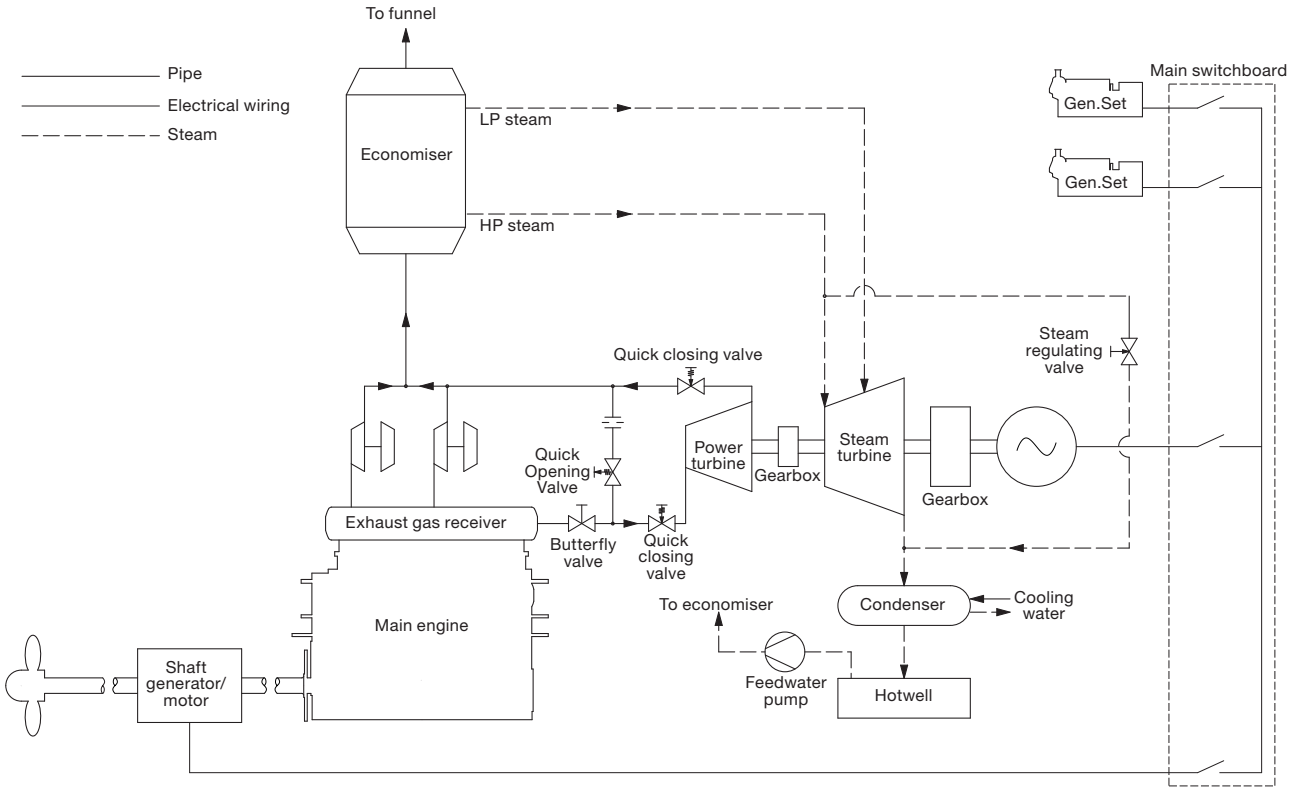

178 57 03-7.0

Fig. 4.05.05: Combined turbines diagram

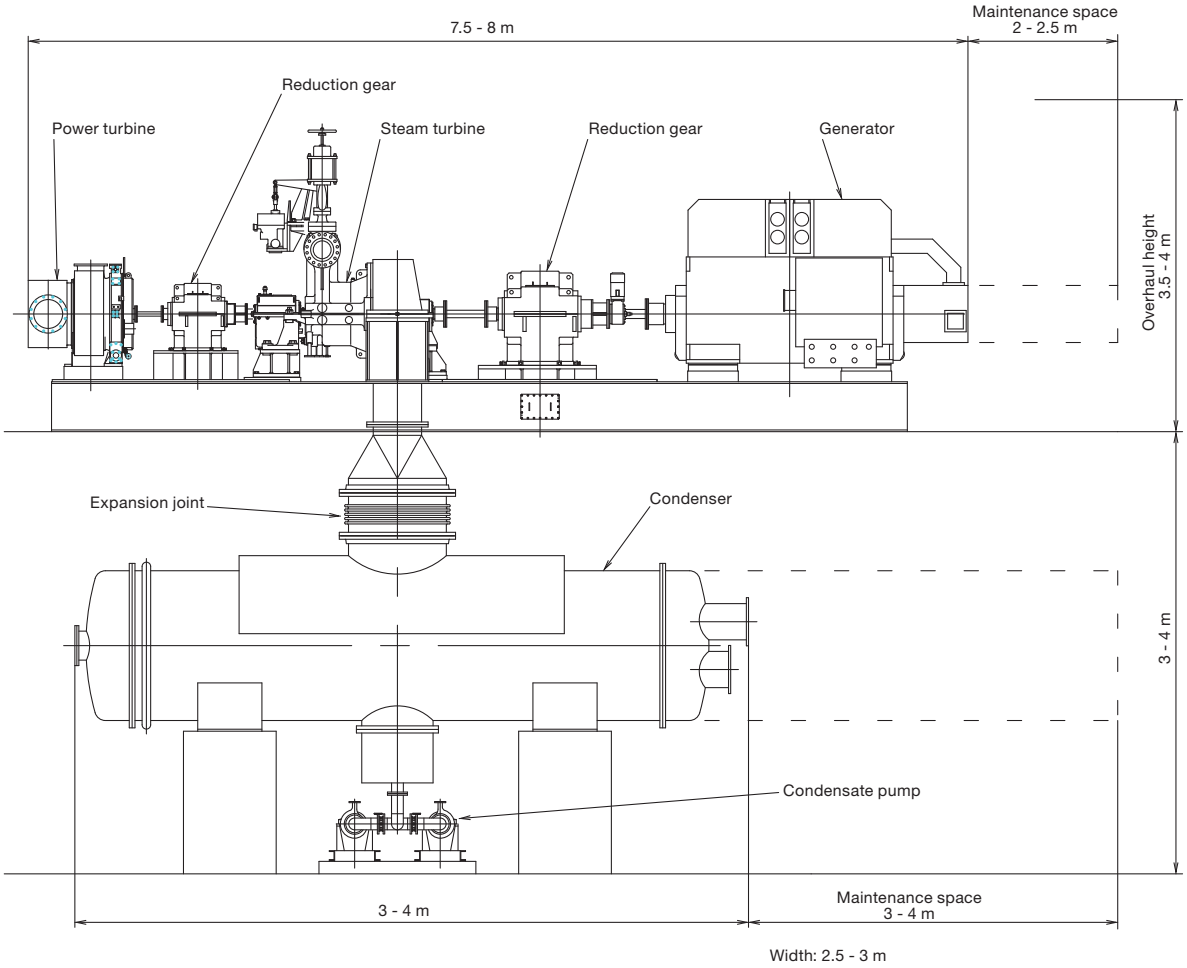

178 57 08-6.0

Fig. 4.05.06: Typical system size for 1,500 kW combined turbines

WHR output

Because all the components come from different manufacturers, the final output and the system efficiency has to be calculated from case to case. However, Fig. 4.05.07 shows a guidance of possible outputs based on theoretically calculated outputs from the system.

Detailed information on the different systems is found in our paper 'Thermo Efficiency System', where the different systems are described in greater detail. The paper is available at: www.mandiesel.com under 'Quicklinks' → 'Technical Papers', from where it can be downloaded.

Guidance output of WHR for S70MC-C/ME-C8/-GI engine rated in L1 at ISO conditions				
Cyl.	Engine power	PTG	STG	Combined Turbines
	% SMCR	kWe	kWe	kWe
5	100	639	918	1,422
	80	405	639	945
6	100	765	1,116	1,728
	80	486	783	1,143
7	100	900	1,305	2,025
	80	567	927	1,350
8	100	1,026	1,494	2,322
	80	657	1,053	1,539

Table 4.05.07: Theoretically calculated outputs

Waste Heat Recovery Systems (WHR)

This section is not applicable

for

65-26 MC/MC-C/ME-C/ME-C-GI/ME-B

L16/24 GenSet Data

Bore: 160 mm Stroke: 240 mm

	Power layout			
	1,200 r/min	60 Hz	1,000 r/min	50 Hz
	Eng. kW	Gen. kW	Eng. kW	Gen. kW
5L16/24	500	475	450	430
6L16/24	660	625	570	542
7L16/24	770	730	665	632
8L16/24	880	835	760	722
9L16/24	990	940	855	812

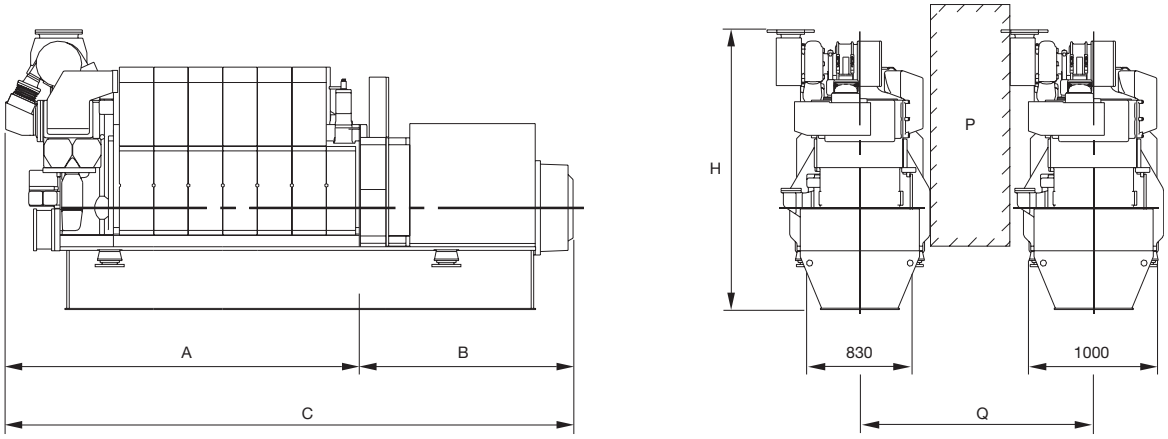

178 23 03-1.0

No. of Cyls.	A (mm)	* B (mm)	* C (mm)	H (mm)	**Dry weight GenSet (t)
5 (1,000 r/min)	2,751	1,400	4,151	2,457	9.5
5 (1,200 r/min)	2,751	1,400	4,151	2,457	9.5
6 (1,000 r/min)	3,026	1,490	4,516	2,457	10.5
6 (1,200 r/min)	3,026	1,490	4,516	2,457	10.5
7 (1,000 r/min)	3,501	1,585	5,086	2,457	11.4
7 (1,200 r/min)	3,501	1,585	5,086	2,457	11.4
8 (1,000 r/min)	3,776	1,680	5,456	2,495	12.4
8 (1,200 r/min)	3,776	1,680	5,456	2,457	12.4
9 (1,000 r/min)	4,151	1,680	5,731	2,495	13.1
9 (1,200 r/min)	4,151	1,680	5,731	2,495	13.1

P Free passage between the engines, width 600 mm and height 2,000 mm
Q Min. distance between engines: 1,800 mm
* Depending on alternator
** Weight incl. standard alternator (based on a Leroy Somer alternator)
All dimensions and masses are approximate and subject to change without prior notice.

178 33 87-4.3

Fig. 4.06.01: Power and outline of L16/24

L16/24 GenSet Data

		Cyl.	5	6	7	8	9
Max. continuous rating at	**1,000 rpm**	kW	450	540	630	720	810
Engine Driven Pumps:							
H.T. cooling water pump	(2.0 bar)**	m³/h	10.9	12.7	14.5	16.3	18.1
L.T. cooling water pump	(1.7 bar)**	m³/h	15.7	18.9	22.0	25.1	28.3
Lubricating oil	(3-5.0 bar)	m³/h	21	23	24	26	28
External Pumps:							
Diesel oil pump	(5 bar at fuel oil inlet A1)	m³/h	0.31	0.38	0.44	0.50	0.57
Fuel oil supply pump	(4 bar discharge pressure)	m³/h	0.15	0.18	0.22	0.25	0.28
Fuel oil circulating pump	(8 bar at fuel oil inlet A1)	m³/h	0.32	0.38	0.45	0.51	0.57
Cooling Capacities:							
Lubricating oil		kW	79	95	110	126	142
Charge air L.T.		kW	43	51	60	68	77
*Flow L.T. at 36°C inlet and 44°C outlet		m³/h	13.1	15.7	18.4	21.0	23.6
Jacket cooling		kW	107	129	150	171	193
Charge air H.T		kW	107	129	150	171	193
Gas Data:							
Exhaust gas flow		kg/h	3,321	3,985	4,649	5,314	5,978
Exhaust gas temp.		°C	330	330	330	330	330
Max. allowable back press.		bar	0.025	0.025	0.025	0.025	0.025
Air consumption		kg/h	3,231	3,877	4,523	5,170	5,816
Starting Air System:							
Air consumption per start		Nm	0.47	0.56	0.65	0.75	0.84
Air consumption per start		Nm	0.80	0.96	1.12	1.28	1.44
Heat Radiation:							
Engine		kW	11	13	15	17	19
Alternator		kW	(see separate data from the alternator maker)				

The stated heat balances are based on tropical conditions, the flows are based on ISO ambient condition.

* The outlet temperature of the H.T. water is fixed to 80°C, and 44°C for L.T. water. At different inlet temperatures the flow will change accordingly.

Example: if the inlet temperature is 25°C, then the L.T. flow will change to (44-36)/(44-25)*100 = 42% of the original flow. If the temperature rises above 36°C, then the L.T. outlet will rise accordingly.

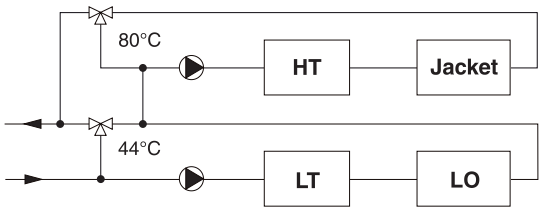

178 56 53-3.0

** Max. permission inlet pressure 2.0 bar.

Fig. 4.06.02a: List of capacities for L16/24 1,000 rpm, IMO Tier I. Tier II values available on request.

L16/24 GenSet Data

		Cyl.	5	6	7	8	9
Max continues rating	**1,200 rpm**	kW	500	660	770	880	990
Engine driven pumps:							
LT cooling water pump	2 bar	m³/h	27	27	27	27	27
HT cooling water pump	2 bar	m³/h	27	27	27	27	27
Lubricating oil main pump	8 bar	m³/h	21	21	35	35	35
Separate pumps:							
Max. Delivery pressure of cooling water pumps		bar	2.5	2.5	2.5	2.5	2.5
Diesel oil pump	(5 bar at fuel oil inlet A1)	m³/h	0.35	0.46	0.54	0.61	0.69
Fuel oil supply pump	(4 bar discharge pressure)	m³/h	0.17	0.22	0.26	0.30	0.34
Fuel oil circulating pump	(8 bar at fuel oil inlet A1)	m³/h	0.35	0.46	0.54	0.62	0.70
Cooling capacity:							
Lubricating oil		kW	79	103	122	140	159
Charge air LT		kW	40	57	70	82	95
Total LT system		kW	119	160	192	222	254
Flow LT at 36°C inlet and 44°C outlet		m³/h	13	17	21	24	27
Jacket cooling		kW	119	162	191	220	249
Charge air HT		kW	123	169	190	211	230
Total HT system		kW	242	331	381	431	479
Flow HT at 44°Cinlet and 80°C outlet		m³/h	6	8	9	10	11
Total from engine		kW	361	491	573	653	733
LT flow at 36°C inlet		m³/h	13	17	21	24	27
LT temp. Outlet engine (at 36°C and 1 string cooling water system)		°C	60	61	60	60	59
Gas Data:							
Exhaust gas flow		kg/h	3,400	4,600	5,500	6,200	7,000
Exhaust gas temp.		°C	330	340	340	340	340
Max. Allowable back press.		bar	0.025	0.025	0.025	0.025	0.025
Air consumption		kg/h	3,280	4,500	5,300	6,000	6,800
Starting Air System:							
Air consumption per start		Nm	0.47	0.56	0.65	0.75	0.84
Air consumption per start		Nm	0.80	0.96	1.12	1.28	1.44
Heat Radiation:							
Engine		kW	9	13	15	18	21
Alternator		kW	(see separate data from the alternator maker)				

The stated heat balances are based on tropical conditions. The exhaust gas data (exhaust gas flow, exhaust gas temp. and air consumption). are based on ISO ambient condition.

* The outlet temperature of the HT water is fixed to 80°C, and 44°C for the LT water

At different inlet temperature the flow will change accordingly.

Example: If the inlet temperature is 25°C then the LT flow will change to (44-36)/(44-25)*100 = 42% of the original flow. If the temperature rises above 36°C, then the L.T. outlet will rise acordingly.

Fig. 4.06.02b: List of capacities for L16/24 1,200 rpm, IMO Tier I. Tier II values available on request.

L21/31 GenSet Data

Bore: 210 mm **Stroke: 310 mm**

	Power layout			
	900 r/min	60 Hz	1,000 r/min	50 Hz
	Eng. kW	Gen. kW	Eng. kW	Gen. kW
5L21/31	1,000	950	1,000	950
6L21/31	1,320	1,254	1,320	1,254
7L21/31	1,540	1,463	1,540	1,463
8L21/31	1,760	1,672	1,760	1,672
9L21/31	1,980	1,881	1,980	1,881

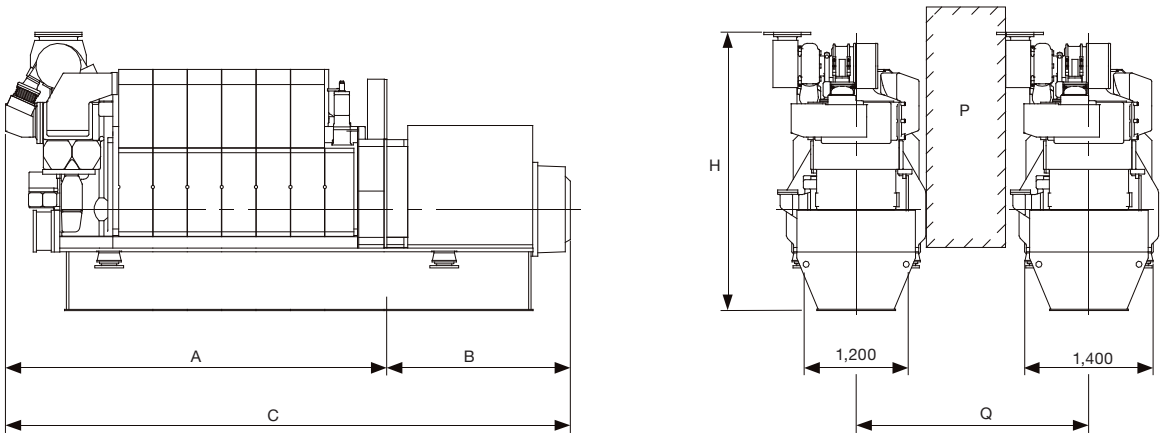

178 23 04-3.2

Cyl. no	A (mm)	* B (mm)	* C (mm)	H (mm)	**Dry weight GenSet (t)
5 (900 rpm)	3,959	1,820	5,829	3,183	21.5
5 (1000 rpm)	3,959	1,870	5,829	3,183	21.5
6 (900 rpm)	4,314	2,000	6,314	3,183	23.7
6 (1000 rpm)	4,314	2,000	6,314	3,183	23.7
7 (900 rpm)	4,669	1,970	6,639	3,183	25.9
7 (1000 rpm)	4,669	1,970	6,639	3,183	25.9
8 (900 rpm)	5,024	2,250	7,274	3,289	28.5
8 (1000 rpm)	5,024	2,250	7,274	3,289	28.5
9 (900 rpm)	5,379	2,400	7,779	3,289	30.9
9 (1000 rpm)	5,379	2,400	7,779	3,289	30.9

P Free passage between the engines, width 600 mm and height 2000 mm.
Q Min. distance between engines: 2400 mm (without gallery) and 2600 mm (with galley)
* Depending on alternator
** Weight incl. standard alternator (based on a Uljanik alternator)
All dimensions and masses are approximate, and subject to changes without prior notice.

Fig. 4.07.01: Power and outline of L21/31

L21/31 GenSet Data

		Cyl.	5	6	7	8	9
Maximum continuous rating at	**900 rpm**	kW	950	1,320	1,540	1,760	1,980
Engine-driven pumps:							
LT cooling water pump	(1-2.5 bar)	m³/h	55	55	55	55	55
HT cooling water pump	(1-2.5 bar)	m³/h	55	55	55	55	55
Lubricating oil pump	(3-5 bar)	m³/h	31	31	41	41	41
External pumps:							
Max. delivery pressure of cooling water pumps		bar	2.5	2.5	2.5	2.5	2.5
Diesel oil pump	(5 bar at fuel oil inlet A1)	m³/h	0.65	0.91	1.06	1.21	1.36
Fuel oil supply pump	(4 bar discharge pressure)	m³/h	0.32	0.44	0.52	0.59	0.67
Fuel oil circulating pump	(8 bar at fuel oil inlet A1)	m³/h	0.66	0.92	1.07	1.23	1.38
Cooling capacities:							
Lubricating oil		kW	195	158	189	218	247
LT charge air		kW	118	313	366	418	468
Total LT system		kW	313	471	555	636	715
LT flow at 36°C inlet and 44°C outlet*		m³/h	27.0	44.0	48.1	51.9	54.0
Jacket cooling		kW	154	274	326	376	427
HT charge air		kW	201	337	383	429	475
Total HT system		kW	355	611	709	805	902
HT flow at 44°C inlet and 80°C outlet*		m³/h	8.5	19.8	22.6	25.3	27.9
Total from engine		kW	668	1082	1264	1441	1617
LT flow from engine at 36°C inlet		m³/h	27.0	43.5	47.6	51.3	53.5
LT outlet temperature from engine at 36°C inlet (1-string cooling water system)		°C	55	58	59	61	63
Gas data:							
Exhaust gas flow		kg/h	6,679	9,600	11,200	12,800	14,400
Exhaust gas temperature at turbine outlet		°C	335	348	348	348	348
Maximum allowable back pressure		bar	0.025	0.025	0.025	0.025	0.025
Air consumption		kg/h	6,489	9,330	10,900	12,400	14,000
Starting air system:							
Air consumption per start incl. air for jet assist		Nm³	1.0	1.2	1.4	1.6	1.8
Heat radiation:							
Engine		kW		49	50	54	58
Alternator		kW	(See separate data from alternator maker)				

The stated heat balances are based on 100% load and tropical condition.

The mass flows and exhaust gas temperature are based on ISO ambient condition.

* The outlet temperature of the HT water is fixed to 80°C, and 44°C for the LT water.
At different inlet temperature the flow will change accordingly.

Example: If the inlet temperature is 25°C then the LT flow will change to (44-36)/(44-25)*100 = 42% of the original flow.
The HT flow will not change.

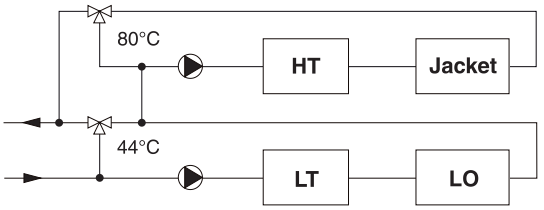

17856 53-3.0

Fig. 4.07.02a: List of capacities for L21/31, 900 rpm, IMO Tier I. Tier II values available on request.

L21/31 GenSet Data

		Cyl.	5	6	7	8	9
Maximum continuous rating at	**1000 rpm**	kW	1,000	1,320	1,540	1,760	1,980
Engine-driven pumps:							
LT cooling water pump	(1-2.5 bar)	m³/h	61	61	61	61	61
HT cooling water pump	(1-2.5 bar)	m³/h	61	61	61	61	61
Lubricating oil pump	(3-5 bar)	m³/h	34	34	46	46	46
External pumps:							
Max. delivery pressure of cooling water pumps		bar	2.5	2.5	2.5	2.5	2.5
Diesel oil pump	(5 bar at fuel oil inlet A1)	m³/h	0.69	0.92	1.08	1.23	1.38
Fuel oil supply pump	(4 bar discharge pressure)	m³/h	0.34	0.45	0.53	0.60	0.68
Fuel oil circulating pump	(8 bar at fuel oil inlet A1)	m³/h	0.70	0.93	1.09	1.25	1.40
Cooling capacities:							
Lubricating oil		kW	206	162	192	222	252
LT charge air		kW	125	333	388	443	499
Total LT system		kW	331	495	580	665	751
LT flow at 36°C inlet and 44°C outlet*		m³/h	35.5	47.8	52.1	56.2	60.5
Jacket cooling		kW	163	280	332	383	435
HT charge air		kW	212	361	411	460	509
Total HT system		kW	374	641	743	843	944
HT flow at 44°C inlet and 80°C outlet*		m³/h	8.9	20.9	23.9	26.7	29.5
Total from engine		kW	705	1136	1323	1508	1695
LT flow from engine at 36°C inlet		m³/h	35.5	47.2	51.5	55.6	59.9
LT outlet temperature from engine at 36°C inlet (1-string cooling water system)		°C	53	57	59	60	61
Gas data:							
Exhaust gas flow		kg/h	6,920	10,200	11,900	13,600	15,300
Exhaust gas temperature at turbine outlet		°C	335	333	333	333	333
Maximum allowable back pressure		bar	0.025	0.025	0.025	0.025	0.025
Air consumption		kg/h	6,720	9,940	11,600	13,200	14,900
Starting air system:							
Air consumption per start incl. air for jet assist		Nm³	1.0	1.2	1.4	1.6	1.8
Heat radiation:							
Engine		kW	21	47	50	54	56
Alternator		kW	(See separate data from alternator maker)				

The stated heat balances are based on 100% load and tropical condition.

The mass flows and exhaust gas temperature are based on ISO ambient condition.

* The outlet temperature of the HT water is fixed to 80°C, and 44°C for the LT water.
At different inlet temperature the flow will change accordingly.

Example: If the inlet temperature is 25°C then the LT flow will change to (44-36)/(44-25)*100 = 42% of the original flow.
The HT flow will not change.

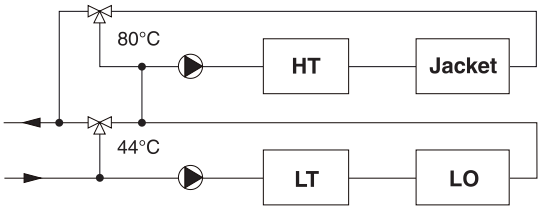

17856 53-3.0

Fig. 4.07.02a: List of capacities for L21/31, 1,000 rpm, IMO Tier I. Tier II values available on request.

L23/30H GenSet Data

Bore: 225 mm **Stroke: 300 mm**

	Power layout					
	720 r/min Eng. kW	60 Hz Gen. kW	750 r/min Eng. kW	50 Hz Gen. kW	900 r/min Eng. kW	60 Hz Gen. kW
5L23/30H	650	620	675	640		
6L23/30H	780	740	810	770	960	910
7L23/30H	910	865	945	900	1,120	1,065
8L23/30H	1,040	990	1,080	1,025	1,280	1,215

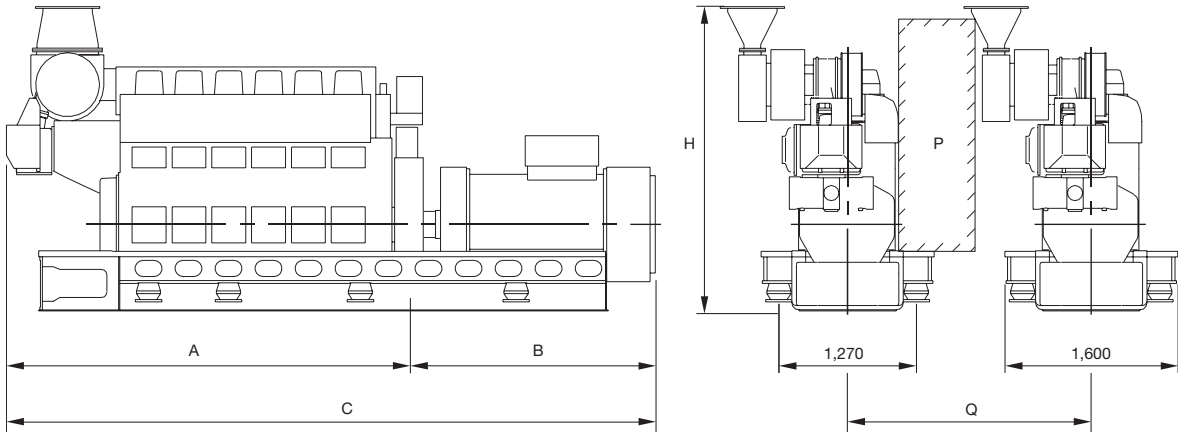

178 23 06-7.0

No. of Cyls.	A (mm)	* B (mm)	* C (mm)	H (mm)	**Dry weight GenSet (t)
5 (720 r/min)	3,369	2,155	5,524	2,383	18.0
5 (750 r/min)	3,369	2,155	5,524	2,383	18.0
6 (720 r/min)	3,738	2,265	6,004	2,383	19.7
6 (750 r/min)	3,738	2,265	6,004	2,383	19.7
6 (900 r/min)	3,738	2,265	6,004	2,815	21.0
7 (720 r/min)	4,109	2,395	6,504	2,815	21.4
7 (750 r/min)	4,109	2,395	6,504	2,815	21.4
7 (900 r/min)	4,109	2,395	6,504	2,815	22.8
8 (720 r/min)	4,475	2,480	6,959	2,815	23.5
8 (750 r/min)	4,475	2,480	6,959	2,815	23.5
8 (900 r/min)	4,475	2,340	6,815	2,815	24.5

P Free passage between the engines, width 600 mm and height 2,000 mm
Q Min. distance between engines: 2,250 mm
* Depending on alternator
** Weight includes a standard alternator, make A. van Kaick
All dimensions and masses are approximate and subject to change without prior notice.

178 34 53-7.1

Fig. 4.08.01: Power and outline of L23/30H

L23/30H GenSet Data

		Cyl.	5	6	7	8
Max. continuous rating at	**720/750 RPM**	kW	650/675	780/810	910/945	1,040/1,080
Engine-driven Pumps:						
Fuel oil feed pump	(5.5-7.5 bar)	m^3/h	1.0	1.0	1.0	1.0
L.T. cooling water pump	(1-2.5 bar)	m^3/h	55	55	55	55
H.T. cooling water pump	(1-2.5 bar)	m^3/h	36	36	36	36
Lub. oil main pump	(3-5 bar)	m^3/h	16	16	20	20
Separate Pumps:						
Diesel oil pump	(4 bar at fuel oil inlet A1)	m^3/h	0.46/0.48	0.55/0.57	0.64/0.67	0.73/0.76
Fuel oil supply pump ***	(4 bar discharge pressure)	m^3/h	0.22/0.23	0.27/0.28	0.31/0.33	0.36/0.37
Fuel oil circulating pump	(8 bar at fuel oil inlet A1)	m^3/h	0.46/0.48	0.56/0.58	0.65/0.67	0.74/0.77
L.T. cooling water pump*	(1-2.5 bar)	m^3/h	35	42	48	55
L.T. cooling water pump**	(1-2.5 bar)	m^3/h	48	54	60	73
H.T. cooling water pump	(1-2.5 bar)	m^3/h	20	24	28	32
Lub. oil stand-by pump	(3-5 bar)	m^3/h	14.0	15.0	16.0	17.0
Cooling Capacities:						
Lubricating Oil:						
Heat dissipation		kW	69	84	98	112
L.T. cooling water quantity*		m^3/h	5.3	6.4	7.5	8.5
L.T. cooling water quantity**		m^3/h	18	18	18	25
Lub. oil temp. inlet cooler		°C	67	67	67	67
L.T. cooling water temp. inlet cooler		°C	36	36	36	36
Charge Air:						
Heat dissipation		kW	251	299	348	395
L.T. cooling water quantity		m^3/h	30	36	42	48
L.T. cooling water inlet cooler		°C	36	36	36	36
Jacket Cooling:						
Heat dissipation		kW	182	219	257	294
H.T. cooling water quantity		m^3/h	20	24	28	32
H.T. cooling water temp. inlet cooler		°C	77	77	77	77
Gas Data:						
Exhaust gas flow		kg/h	5,510	6,620	7,720	8,820
Exhaust gas temp.		°C	310	310	310	310
Max. allowable back. press.		bar	0.025	0.025	0.025	0.025
Air consumption		kg/s	1.49	1.79	2.09	2.39
Starting Air System:						
Air consumption per start		Nm^3	2.0	2.0	2.0	2.0
Heat Radiation:						
Engine		kW	21	25	29	34
Generator		kW	(See separat data from generator maker)			

The stated heat dissipation, capacities of gas and engine-driven pumps are given at 720 RPM. Heat dissipation gas and pump capacities at 750 RPM are 4% higher than stated. If L.T. cooling are sea water, the L.T. inlet is 32° C instead of 36°C.

Based on tropical conditions, except for exhaust flow and air consumption which are based on ISO conditions.

* Only valid for engines equipped with internal basic cooling water system nos. 1 and 2.
** Only valid for engines equipped with combined coolers, internal basic cooling water system no. 3.
*** To compensate for built on pumps, ambient condition, calorific value and adequate circulations flow. The ISO fuel oil consumption is multiplied by 1.45.

Fig. 4.08.02a: List of capacities for L23/30H, 720/750 rpm, IMO Tier I.

L23/30H GenSet Data

		Cyl.	6	7	8
Max. continuous rating at	**900 RPM**	kW	960	1,120	1,280
Engine-driven Pumps:					
Fuel oil feed pump	(5.5-7.5 bar)	m³/h	1.3	1.3	1.3
L.T. cooling water pump	(1-2.5 bar)	m³/h	69	69	69
H.T. cooling water pump	(1-2.5 bar)	m³/h	45	45	45
Lub. oil main pump	(3.5-5 bar)	m³/h	20	20	20
Separate Pumps:					
Diesel oil pump	(4 bar at fuel oil inlet A1)	m³/h	0.69	0.81	0.92
Fuel oil supply pump***	(4 bar discharge pressure)	m³/h	0.34	0.40	0.45
Fuel oil circulating pump	(8 bar at fuel oil inlet A1)	m³/h	0.70	0.82	0.94
L.T. cooling water pump*	(1-2.5 bar)	m³/h	52	61	70
L.T. cooling water pump**	(1-2.5 bar)	m³/h	63	71	85
H.T. cooling water pump	(1-2.5 bar)	m³/h	30	35	40
Lub. oil stand-by pump	(3.5-5 bar)	m³/h	17	18	19
Cooling Capacities:					
Lubricating Oil:					
Heat dissipation		kW	117	137	158
L.T. cooling water quantity*		m³/h	7.5	8.8	10.1
SW L.T. cooling water quantity**		m³/h	18	18	25
Lub. oil temp. inlet cooler		°C	67	67	67
L.T. cooling water temp. inlet cooler		°C	36	36	36
Charge Air:					
Heat dissipation		kW	369	428	487
L.T. cooling water quantity		m³/h	46	53	61
L.T. cooling water inlet cooler		°C	36	36	36
Jacket Cooling:					
Heat dissipation		kW	239	281	323
H.T. cooling water quantity		m³/h	30	35	40
H.T. cooling water temp. inlet cooler		°C	77	77	77
Gas Data:					
Exhaust gas flow		kg/h	8,370	9,770	11,160
Exhaust gas temp.		°C	325	325	325
Max. allowable back. press.		bar	0.025	0.025	0.025
Air consumption		kg/s	2.25	2.62	3.00
Startiang Air System:					
Air consumption per start		Nm³	2.0	2.0	2.0
Haeat Radiation:					
Engine		kW	32	37	42
Generator		kW	(See separat data from generator maker)		

If L.T. cooling are sea water, the L.T. inlet is 32° C instead of 36° C.

Based on tropical conditions, except for exhaust flow and air consumption which are based on ISO conditions.

* Only valid for engines equipped with internal basic cooling water system nos. 1 and 2.
** Only valid for engines equipped with combined coolers, internal basic cooling water system no. 3.
*** To compensate for built on pumps, ambient condition, calorific value and adequate circulations flow. The ISO fuel oil consumption is multiplied by 1.45.

Fig. 4.08.02b: List of capacities for L23/30H, 900 rpm, IMO Tier I.

L27/38 GenSet Data

Bore: 270 mm **Stroke: 380 mm**

	Power layout					
	720 r/min Eng. kW	60 Hz Gen. kW	750 r/min Eng. kW	50 Hz Gen. kW	720/750 r/min (MGO/MDO) Eng. kW	60/50 Hz (MGO/MDO) Gen. kW
5L27/38	1,500	1,440	1,600	1,536	-	-
6L27/38	1,980	1,900	1,980	1,900	2,100	2,016
7L27/38	2,310	2,218	2,310	2,218	2,450	2,352
8L27/38	2,640	2,534	2,640	2,534	2,800	2,688
9L27/38	2,970	2,851	2,970	2,851	3,150	3,054

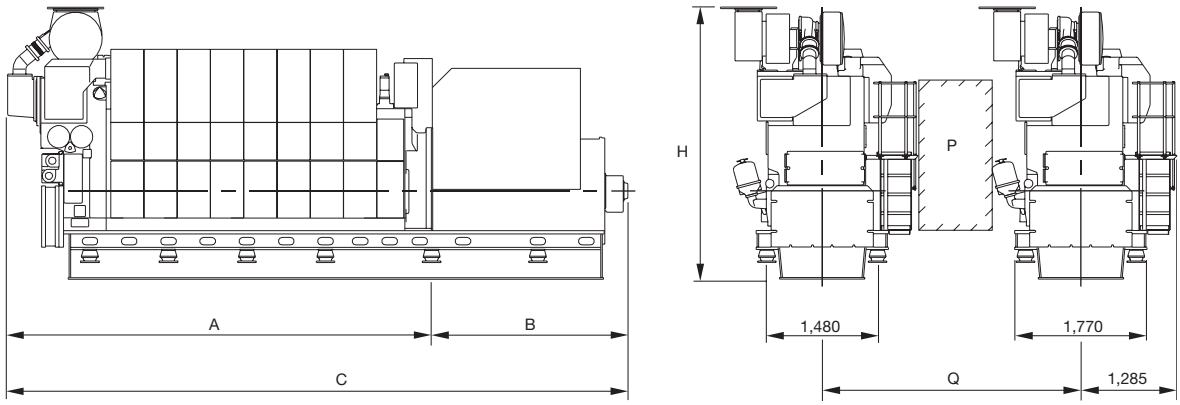

178 23 07-9.0

No. of Cyls.	A (mm)	* B (mm)	* C (mm)	H (mm)	**Dry weight GenSet (t)
5 (720 r/min)	4,346	2,486	6,832	3,628	42.3
5 (750 r/min)	4,346	2,486	6,832	3,628	42.3
6 (720 r/min)	4,791	2,766	7,557	3,712	45.8
6 (750 r/min)	4,791	2,766	7,557	3,712	46.1
7 (720 r/min)	5,236	2,766	8,002	3,712	52.1
7 (750 r/min)	5,236	2,766	8,002	3,712	52.1
8 (720 r/min)	5,681	2,986	8,667	3,899	56.3
8 (750 r/min)	5,681	2,986	8,667	3,899	58.3
9 (720 r/min)	6,126	2,986	9,112	3,899	63.9
9 (750 r/min)	6,126	2,986	9,112	3,899	63.9

P Free passage between the engines, width 600 mm and height 2,000 mm
Q Min. distance between engines: 2,900 mm (without gallery) and 3,100 mm (with gallery)
* Depending on alternator
** Weight includes a standard alternator
All dimensions and masses are approximate and subject to change without prior notice.

178 33 89-8.2

Fig. 4.09.01: Power and outline of L27/38

L27/38 GenSet Data

		Cyl.	5	6	7	8	9
Max continues rating	**720 RPM**	kW	1,500	1,980	2,310	2,640	2,970
Engine driven pumps:							
LT cooling water pump	(2.5 bar)	m³/h	58	58	58	58	58
HT cooling water pump	(2.5 bar)	m³/h	58	58	58	58	58
Lubricating oil main pump	(8 bar)	m³/h	64	64	92	92	92
Separate pumps:							
Max. Delivery pressure of cooling water pumps		bar	2.5	2.5	2.5	2.5	2.5
Diesel oil pump	(5 bar at fuel oil inlet A1)	m³/h	1.02	1.33	1.55	1.77	2.00
Fuel oil Supply pump	(4 bar at discharge pressure)	m³/h	0.50	0.66	0.76	0.87	0.98
Fuel oil circulating pump	(8 bar at fuel oil inlet A1)	m³/h	1.03	1.35	1.57	1.80	2.02
Cooling capacity:							
Lubricating oil		kW	206	283	328	376	420
Charge air LT		kW	144	392	436	473	504
Total LT system		kW	350	675	764	849	924
Flow LT at 36°C inlet and 44°C outlet		m³/h	38	58	58	58	58
Jacket cooling		kW	287	486	573	664	754
Charge air HT		kW	390	558	640	722	802
Total HT system		kW	677	1,044	1,213	1,386	1,556
Flow HT at 44°Cinlet and 80°C outlet		m³/h	16	22	27	32	38
Total from engine		kW	1,027	1,719	1,977	2,235	2,480
LT flow at 36°C inlet		m³/h	38	58	58	58	58
LT temp. Outlet engine (at 36°C and 1 string cooling water system)		°C	59	58	61	64	68
Gas Data:							
Exhaust gas flow		kg/h	10,476	15,000	17,400	19,900	22,400
Exhaust gas temp.		°C	330	295	295	295	295
Max. Allowable back press.		bar	0,025	0,025	0,025	0,025	0,025
Air consumption		kg/h	10,177	14,600	17,000	19,400	21,800
Starting Air System:							
Air consumption per start		Nm³	2,5	2,9	3,3	3,8	4,3
Heat Radiation:							
Engine		kW	53	64	75	68	73
Alternator		kW	(see separate data from the alternator maker)				

The stated heat balances are based on tropical conditions. The exhaust gas data (exhaust gas flow, exhaust gas temp. and air consumption). are based on ISO ambient condition.

* The outlet temperature of the HT water is fixed to 80°C, and 44°C for the LT water

At different inlet temperature the flow will change accordingly.

Example: If the inlet temperature is 25°C then the LT flow will change to (46-36)/(46-25)*100 = 53% of the original flow. The HT flow will not change.

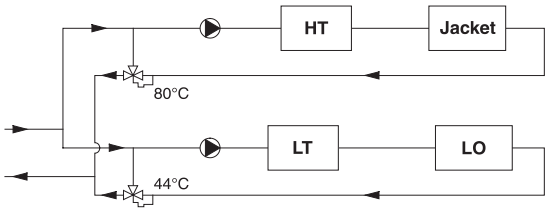

178 48 63-6.1

Fig. 4.09.02a: List of capacities for L27/38, 720 rpm, IMO Tier I. Tier II values available on request.

L27/38 GenSet Data

		Cyl.	5	6	7	8	9
Max continues rating	**750 RPM**	kW	1,600	1,980	2,310	2,640	2,970
Engine driven pumps:							
LT cooling water pump	2.5 bar	m³/h	70	70	70	70	70
HT cooling water pump	2.5 bar	m³/h	70	70	70	70	70
Lubricating oil main pump	8 bar	m³/h	66	66	96	96	96
Separate pumps:							
Max. Delivery pressure of cooling water pumps		bar	2.5	2.5	2.5	2.5	2.5
Diesel oil pump	(5 bar at fuel oil inlet A1)	m³/h	1.10	1.34	1.57	1.79	2.01
Fuel oil supply pump	(4 bar discharge pressure)	m³/h	0.54	0.66	0.77	0.88	0.99
Fuel oil circulating pump	(8 bar at fuel oil inlet A1)	m³/h	1.11	1.36	1.59	1.81	2.04
Cooling capacity:							
Lubricating oil		kW	217	283	328	376	420
Charge air LT		kW	155	392	436	473	504
Total LT system		kW	372	675	764	849	924
Flow LT at 36°C inlet and 44°C outlet		m³/h	40	70	70	70	70
Jacket cooling		kW	402	486	573	664	754
Charge air HT		kW	457	558	640	722	802
Total HT system		kW	859	1,044	1,213	1,386	1,556
Flow HT at 44°Cinlet and 80°C outlet		m³/h	21	22	27	32	38
Total from engine		kW	1,231	1,719	1,977	2,235	2,480
LT flow at 36°C inlet		m³/h	40	70	70	70	70
LT temp. Outlet engine (at 36°C and 1 string cooling water system)		°C	62	55	58	61	64
Gas Data:							
Exhaust gas flow		kg/h	11,693	15,000	17,400	19,900	22,400
Exhaust gas temp.		°C	330	305	305	305	305
Max. Allowable back press.		bar	0.025	0.025	0.025	0.025	0.025
Air consumption		kg/h	11,662	14,600	17,000	19,400	21,800
Starting Air System:							
Air consumption per start		Nm³	2.5	2.9	3.3	3.8	4.3
Heat Radiation:							
Engine		kW	54	64	75	68	73
Alternator		kW	(see separate data from the alternator maker)				

The stated heat balances are based on tropical conditions. The exhaust gas data (exhaust gas flow, exhaust gas temp. and air consumption). are based on ISO ambient condition.

* The outlet temperature of the HT water is fixed to 80°C, and 44°C for the LT water

At different inlet temperature the flow will change accordingly.

Example: If the inlet temperature is 25°C then the LT flow will change to (46-36)/(46-25)*100 = 53% of the original flow. The HT flow will not change.

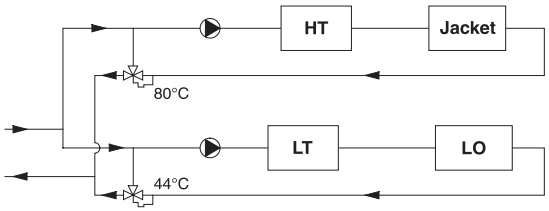

178 48 63-6.1

Fig. 4.09.02b: List of capacities for L27/38, 750 rpm, IMO Tier I. Tier II values available on request.

L28/32H GenSet Data

Bore: 280 mm **Stroke: 320 mm**

	Power layout			
	720 r/min Eng. kW	60 Hz Gen. kW	750 r/min Eng. kW	50 Hz Gen. kW
5L28/32H	1,050	1,000	1,100	1,045
6L28/32H	1,260	1,200	1,320	1,255
7L28/32H	1,470	1,400	1,540	1,465
8L28/32H	1,680	1,600	1,760	1,670
9L28/32H	1,890	1,800	1,980	1,880

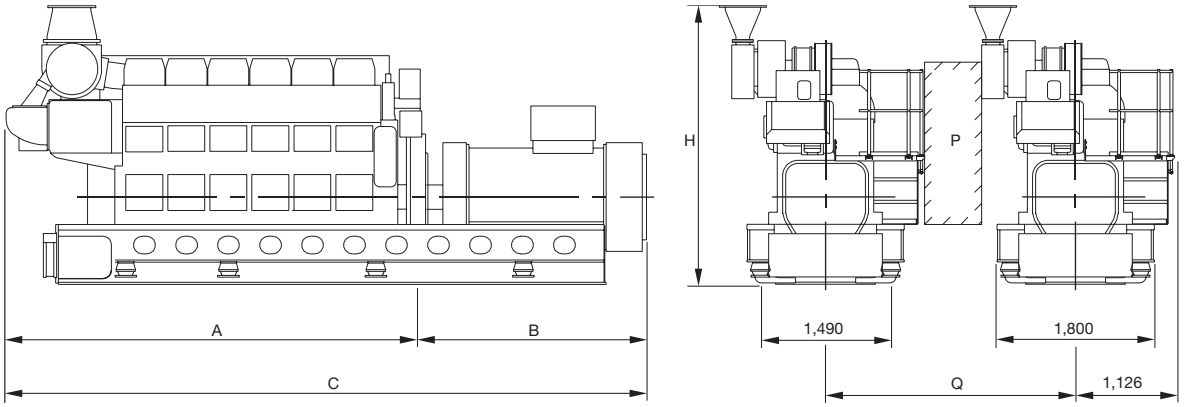

178 23 09-2.0

No. of Cyls.	A (mm)	* B (mm)	* C (mm)	H (mm)	**Dry weight GenSet (t)
5 (720 r/min)	4,279	2,400	6,679	3,184	32.6
5 (750 r/min)	4,279	2,400	6,679	3,184	32.6
6 (720 r/min)	4,759	2,510	7,269	3,184	36.3
6 (750 r/min)	4,759	2,510	7,269	3,184	36.3
7 (720 r/min)	5,499	2,680	8,179	3,374	39.4
7 (750 r/min)	5,499	2,680	8,179	3,374	39.4
8 (720 r/min)	5,979	2,770	8,749	3,374	40.7
8 (750 r/min)	5,979	2,770	8,749	3,374	40.7
9 (720 r/min)	6,199	2,690	8,889	3,534	47.1
9 (750 r/min)	6,199	2,690	8,889	3,534	47.1

P Free passage between the engines, width 600 mm and height 2,000 mm
Q Min. distance between engines: 2,655 mm (without gallery) and 2,850 mm (with gallery)
* Depending on alternator
** Weight includes a standard alternator, make A. van Kaick
All dimensions and masses are approximate and subject to change without prior notice.

178 33 92-1.3

Fig. 4.10.01: Power and outline of L28/32H

L28/32H GenSet Data

		Cyl.	5	6	7	8	9
Max. continuous rating at	720/ 750 RPM	kW	1,050/ 1,100	1,260/ 1,320	1,470/ 1,540	1,680/ 1,760	1,890/ 1,980
Engine-driven Pumps:							
Fuel oil feed pump	(5.5-7.5 bar)	m³/h	1.4	1.4	1.4	1.4	1.4
L.T. cooling water pump	(1-2.5 bar)	m³/h	45	60	75	75	75
H.T. cooling water pump	(1-2.5 bar)	m³/h	45	45	60	60	60
Lub. oil main pump	(3-5 bar)	m³/h	23	23	31	31	31
Separate Pumps:							
Diesel oil Pump	(4 bar at fuel oil inlet A1)	m³/h	0.73/0.77	0.88/0.92	1.02/1.08	1.17/1.23	1.32/1.38
Fuel oil supply pump ***	(4 bar discharge pressure)	m³/h	0.36/0.38	0.43/0.45	0.50/0.53	0.57/0.60	0.64/0.68
Fuel oil circulating pump	(8 bar at fuel oil inlet A1)	m³/h	0.74/0.78	0.89/0.93	1.04/1.09	1.18/1.25	1.33/1.40
L.T. cooling water pump*	(1-2.5 bar)	m³/h	45	54	65	77	89
L.T. cooling water pump**	(1-2.5 bar)	m³/h	65	73	95	105	115
H.T. cooling water pump	(1-2.5 bar)	m³/h	37	45	50	55	60
Lub. oil stand-by pump	(3-5 bar)	m³/h	22	23	25	27	28
Cooling Capacities:							
Lubricating Oil:							
Heat dissipation		kW	105	127	149	172	194
L.T. cooling water quantity*		m³/h	7.8	9.4	11.0	12.7	14.4
SW L.T. cooling water quantity**		m³/h	28	28	40	40	40
Lub. oil temp. inlet cooler		°C	67	67	67	67	67
L.T. cooling water temp. inlet cooler		°C	36	36	36	36	36
Charge Air:							
Heat dissipation		kW	393	467	541	614	687
L.T. cooling water quantity		m³/h	37	45	55	65	75
L.T. cooling water inlet cooler		°C	36	36	36	36	36
Jacket Cooling:							
Heat dissipation		kW	264	320	375	432	489
H.T. cooling water quantity		m³/h	37	45	50	55	60
H.T. cooling water temp. inlet cooler		°C	77	77	77	77	77
Gas Data:							
Exhaust gas flow		kg/h	9,260	11,110	12,970	14,820	16,670
Exhaust gas temp.		°C	305	305	305	305	305
Max. allowable back. press.		bar	0.025	0.025	0.025	0.025	0.025
Air consumption		kg/s	2.51	3.02	3.52	4.02	4.53
Starting Air System:							
Air consumption per start		Nm³	2.5	2.5	2.5	2.5	2.5
Heat Radiation:							
Engine		kW	26	32	38	44	50
Generator		kW	(See separat data from generator maker)				

The stated heat dissipation, capacities of gas and engine-driven pumps are given at 720 RPM. Heat dissipation gas and pump capacities at 750 RPM are 4% higher than stated. If L.T. cooling are sea water, the L.T. inlet is 32° C instead of 36°C.

Based on tropical conditions, except for exhaust flow and air consumption which are based on ISO conditions.

* Only valid for engines equipped with internal basic cooling water system nos. 1 and 2.

** Only valid for engines equipped with combined coolers, internal basic cooling water system no. 3.

*** To compensate for built on pumps, ambient condition, calorific value and adequate circulations flow. The ISO fuel oil consumption is multiplied by 1.45.

Fig. 4.10.02: List of capacities for L28/32H, IMO Tier I.

Installation Aspects

5

Space Requirements and Overhaul Heights

The latest version of most of the drawings of this section is available for download at www.mandieselturbo.com under 'Products' → 'Marine Engines & Systems' → 'Low Speed' → 'Installation Drawings'. First choose engine series, then engine type and select from the list of drawings available for download.

Space Requirements for the Engine

The space requirements stated in Section 5.02 are valid for engines rated at nominal MCR (L_1).

The additional space needed for engines equipped with PTO is stated in Chapter 4.

If, during the project stage, the outer dimensions of the turbocharger seem to cause problems, it is possible, for the same number of cylinders, to use turbochargers with smaller dimensions by increasing the indicated number of turbochargers by one, see Chapter 3.

Overhaul of Engine

The distances stated from the centre of the crankshaft to the crane hook are for the normal lifting procedure and the reduced height lifting procedure (involving tilting of main components). The lifting capacity of a normal engine room crane can be found in Fig. 5.04.01.

The area covered by the engine room crane shall be wide enough to reach any heavy spare part required in the engine room.

A lower overhaul height is, however, available by using the MAN B&W Double-Jib crane, built by Danish Crane Building A/S, shown in Figs. 5.04.02 and 5.04.03.

Please note that the distance 'E' in Fig. 5.02.01, given for a double-jib crane is from the centre of the crankshaft to the lower edge of the deck beam.

A special crane beam for dismantling the turbocharger must be fitted. The lifting capacity of the crane beam for dismantling the turbocharger is stated in Section 5.03.

The overhaul tools for the engine are designed to be used with a crane hook according to DIN 15400, June 1990, material class M and load capacity 1Am and dimensions of the single hook type according to DIN 15401, part 1.

The total length of the engine at the crankshaft level may vary depending on the equipment to be fitted on the fore end of the engine, such as adjustable counterweights, tuning wheel, moment compensators or PTO.

Space Requirement

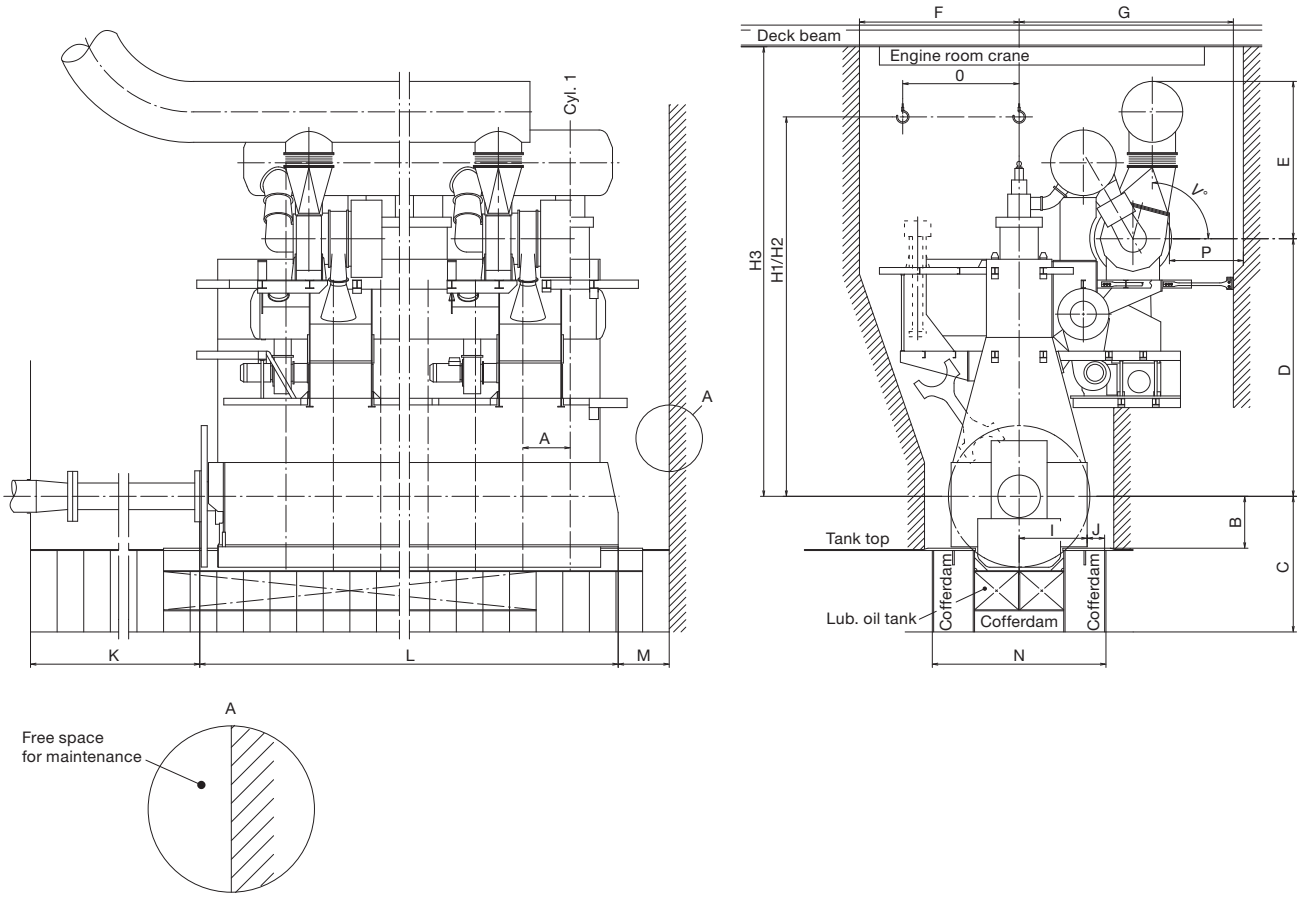

Minimum access conditions around the engine to be used for an escape route is 600 mm.

The dimensions are given in mm, and are for guidance only. If the dimensions cannot be fulfilled, please contact MAN Diesel or our local representative.

Fig. 5.02.01a: Space requirement for the engine, turbocharger on exhaust side (4 59 122) 515 90 52-7.1.0

Cyl. No.	5	6	7	8		
A	1,190				Cylinder distance	
B	805				Distance from crankshaft centre line to foundation	
C	4,072	4,162	4,202	4,267	The dimension includes a cofferdam of 600 mm and must fulfil minimum height to tank top according to classification rules	
D*	8,010	8,010	8,010	8,010	MAN Diesel TCA	Dimensions according to turbocharger choice at nominal MCR
	7,850	7,850	-	7,671	ABB TPL	
	7,970	7,970	7,725	7,725	Mitsubishi MET	
E*	4,087	4,566	4,766	5,066	MAN Diesel TCA	Dimensions according to turbocharger choice at nominal MCR
	4,099	4,404	4,863	4,083	ABB TPL	
	4,029	4,334	3,881	4,002	Mitsubishi MET	
F	3,700				See drawing: 'Engine Top Bracing', if top bracing fitted on camshaft side	
G	5,045	5,415	5,415	5,415	MAN Diesel TCA	The required space to the engine room casing includes mechanical top bracing
	5,415	5,415	-	4,925	ABB TPL	
	5,415	5,415	4,925	4,925	Mitsubishi MET	
H1*	12,550				Minimum overhaul height, normal lifting procedure	
H2*	11,675				Minimum overhaul height, reduced height lifting procedure	
H3*	11,425				The minimum distance from crankshaft centre line to lower edge of deck beam, when using MAN B&W Double Jib Crane	
I	2,195				Length from crankshaft centre line to outer side bedplate	
J	460				Space for tightening control of holding down bolts	
K	See text				K must be equal to or larger than the propeller shaft, if the propeller shaft is to be drawn into the engine room	
L*	8,308	9,498	10,688	11,878	Minimum length of a basic engine, without 2nd order moment compensators	
M	≈ 800				Free space in front of engine	
N	4,970				Distance between outer foundation girders	
O	2,850				Minimum crane operation area	
P	See tekst				See drawing: 'Crane beam for Turbocharger' for overhaul of turbocharger	
V	0°, 15°, 30°, 45°, 60°, 75°, 90°				Maximum 30° when engine room has minimum headroom above the turbocharger	

* The min. **engine room crane** height is ie. dependent on the choice of crane, see the actual heights "H1", "H2" or "H3".

The min. **engine room** height is dependent on "H1", "H2", "H3" or "E+D".

Max. length of engine see the engine outline drawing

Length of engine with PTO see corresponding space requirement

Fig. 5.02.01b: Space requirement for the engine

517 55 69-2.0.0

Space Requirement

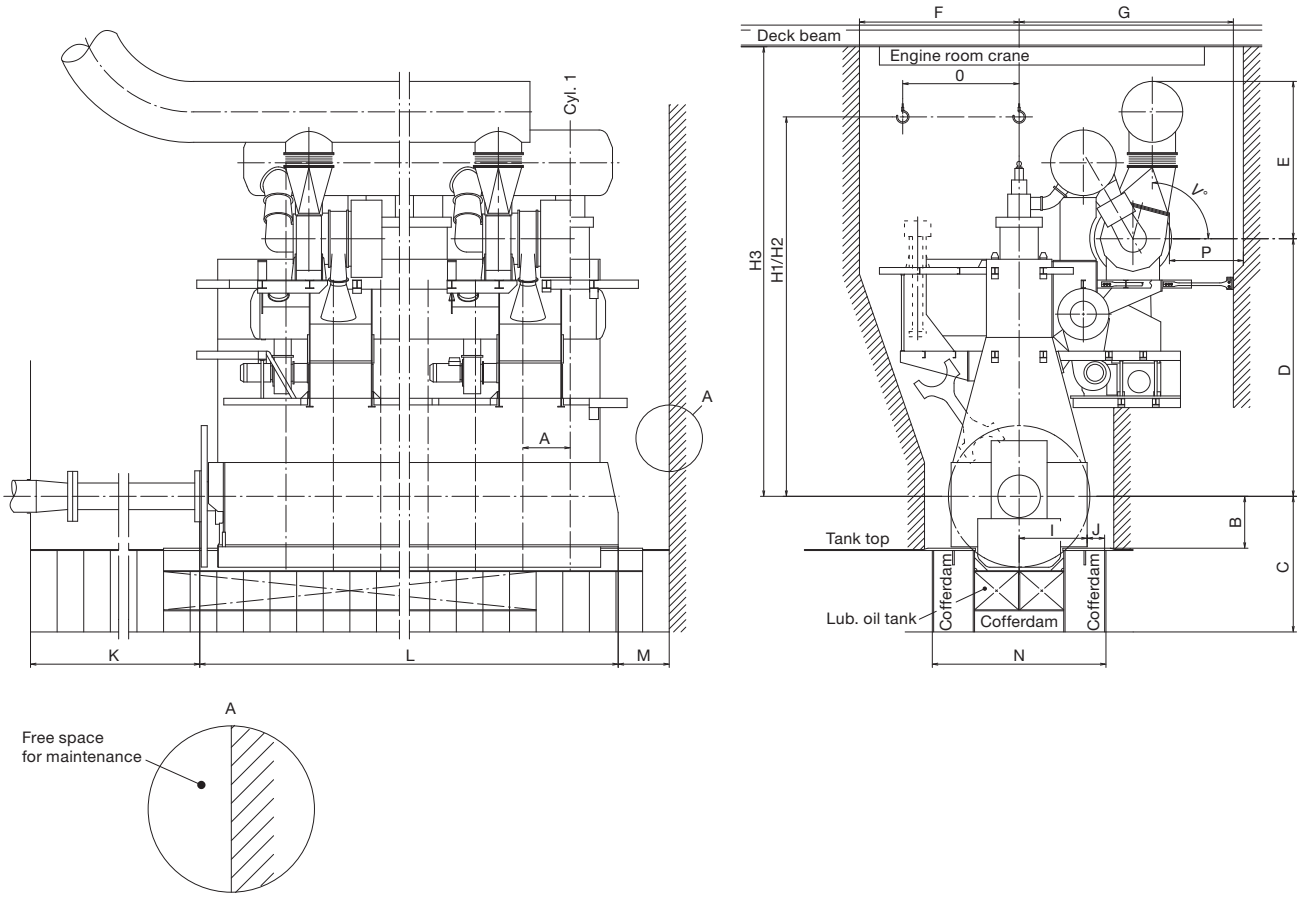

Minimum access conditions around the engine to be used for an escape route is 600 mm.

The dimensions are given in mm, and are for guidance only. If the dimensions cannot be fulfilled, please contact MAN Diesel or our local representative.

Fig. 5.02.01a: Space requirement for the engine, turbocharger on exhaust side (4 59 122) 515 90 52-7.1.0

Cyl. No.	5	6	7	8		
A	1,105				Cylinder distance	
B	1,460				Distance from crankshaft centre line to foundation	
C	3,957	4,037	4,092	4,157	The dimension includes a cofferdam of 600 mm and must fulfil minimum height to tank top according to classification rules	
D*	7,635	7,635	7,635	7,635	MAN Diesel TCA	Dimensions according to turbocharger choice at nominal MCR
	7,285	7,476	7,486	7,486	ABB TPL	
	7,350	7,595	7,595	7,595	Mitsubishi MET	
E*	3,987	4,466	4,766	4,866	MAN Diesel TCA	Dimensions according to turbocharger choice at nominal MCR
	3,827	4,304	4,604	4,704	ABB TPL	
	3,871	4,234	4,534	4,185	Mitsubishi MET	
F	3,460				See drawing: 'Engine Top Bracing', if top bracing fitted on camshaft side	
G	-	5,545	5,545	5,545	MAN Diesel TCA	The required space to the engine room casing includes mechanical top bracing
	-	-	-	-	ABB TPL	
	-	-	-	-	Mitsubishi MET	
H1*	11,950				Minimum overhaul height, normal lifting procedure	
H2*	11,225				Minimum overhaul height, reduced height lifting procedure	
H3*	11,025				The minimum distance from crankshaft centre line to lower edge of deck beam, when using MAN B&W Double Jib Crane	
I	2,062				Length from crankshaft centre line to outer side bedplate	
J	460				Space for tightening control of holding down bolts	
K	See text				K must be equal to or larger than the propeller shaft, if the propeller shaft is to be drawn into the engine room	
L*	7,614	8,698	9,782	10,866	Minimum length of a basic engine, without 2nd order moment compensators	
M	≈ 800				Free space in front of engine	
N	4,692				Distance between outer foundation girders	
O	2,160				Minimum crane operation area	
P	See text				See drawing: 'Crane beam for Turbocharger' for overhaul of turbocharger	
V	0°, 15°, 30°, 45°, 60°, 75°, 90°				Maximum 30° when engine room has minimum headroom above the turbocharger	

* The min. **engine room crane** height is ie. dependent on the choice of crane, see the actual heights "H1", "H2" or "H3".

The min. **engine room** height is dependent on "H1", "H2", "H3" or "E+D".

Max. length of engine see the engine outline drawing

Length of engine with PTO see corresponding space requirement

Fig. 5.02.01b: Space requirement for the engine

517 71 34-1.0.0

Space Requirement

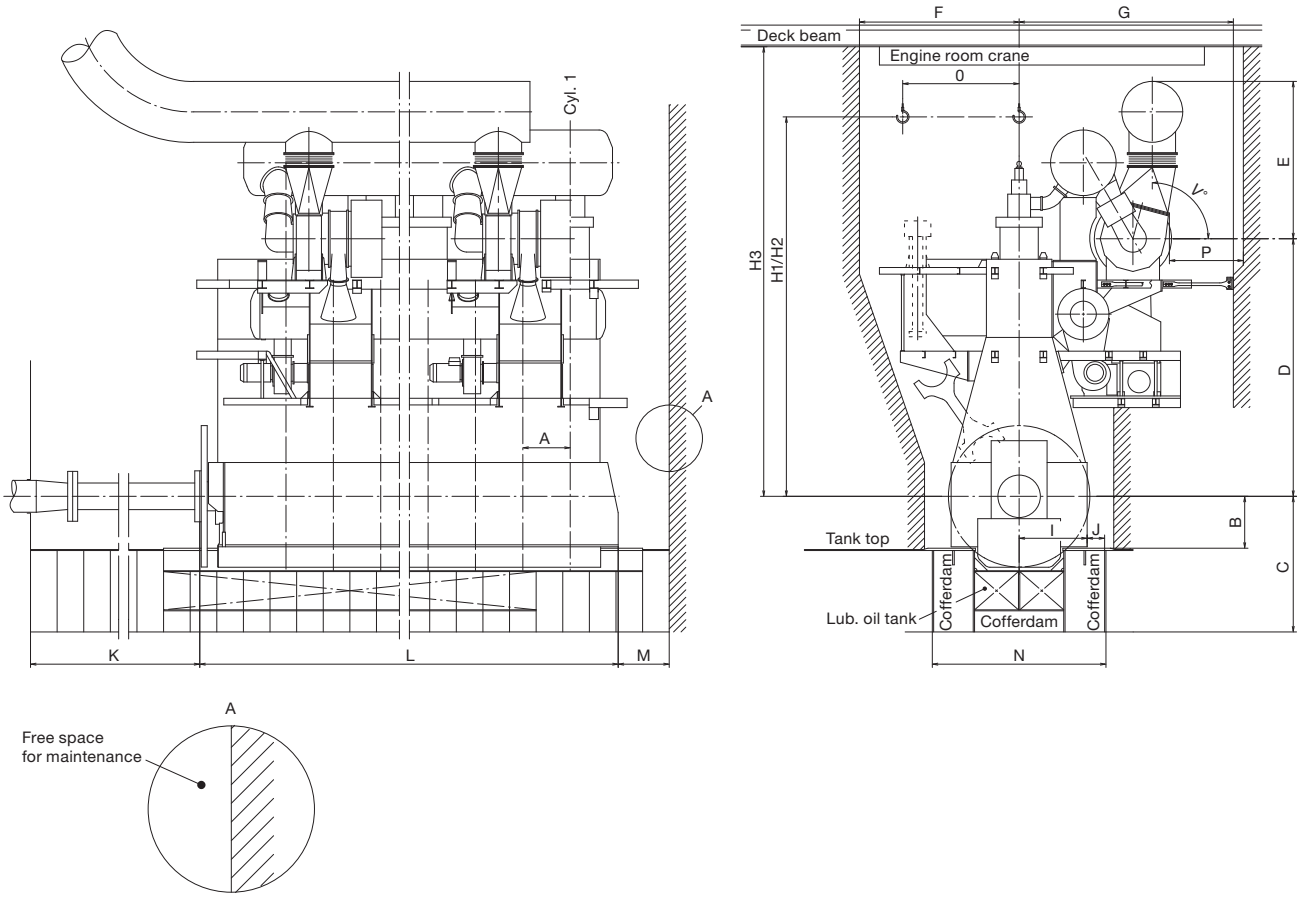

Minimum access conditions around the engine to be used for an escape route is 600 mm.

The dimensions are given in mm, and are for guidance only. If the dimensions cannot be fulfilled, please contact MAN Diesel or our local representative.

Fig. 5.02.01a: Space requirement for the engine, turbocharger on exhaust side (4 59 122) 515 90 52-7.1.0

Cyl. No.	5	6	7	8		
A	1,020				Cylinder distance	
B	1,350				Distance from crankshaft centre line to foundation	
C	3,705	3,780	3,820	5,110	The dimension includes a cofferdam of 600 mm and must fulfil minimum height to tank top according to classification rules	
D*	6,695	7,045	4,045	7,045	MAN Diesel TCA	Dimensions according to turbocharger choice at nominal MCR
	6,700	6,700	6,886	6,886	ABB TPL	
	6,760	6,760	7,005	7,005	Mitsubishi MET	
E*	3,642	3,987	4,292	4,666	MAN Diesel TCA	Dimensions according to turbocharger choice at nominal MCR
	3,627	3,827	4,304	4,504	ABB TPL	
	3,546	3,871	4,234	4,434	Mitsubishi MET	
F	3,900				See drawing: 'Engine Top Bracing', if top bracing fitted on camshaft side	
G	-	-	-	-	MAN Diesel TCA	The required space to the engine room casing includes mechanical top bracing
	-	-	-	-	ABB TPL	
	-	-	-	-	Mitsubishi MET	
H1*	10,750				Minimum overhaul height, normal lifting procedure	
H2*	10,000				Minimum overhaul height, reduced height lifting procedure	
H3*	9,725				The minimum distance from crankshaft centre line to lower edge of deck beam, when using MAN B&W Double Jib Crane	
I	1,885				Length from crankshaft centre line to outer side bedplate	
J	345				Space for tightening control of holding down bolts	
K	See text				K must be equal to or larger than the propeller shaft, if the propeller shaft is to be drawn into the engine room	
L*	7,122	8,142	9,162	10,182	Minimum length of a basic engine, without 2nd order moment compensators	
M	≈ 800				Free space in front of engine	
N	4,410				Distance between outer foundation girders	
O	2,650				Minimum crane operation area	
P	See tekst				See drawing: 'Crane beam for Turbocharger' for overhaul of turbocharger	
V	0°, 15°, 30°, 45°, 60°, 75°, 90°				Maximum 30° when engine room has minimum headroom above the turbocharger	

* The min. **engine room crane** height is ie. dependent on the choice of crane, see the actual heights "H1", "H2" or "H3".

The min. **engine room** height is dependent on "H1", "H2", "H3" or "E+D".

Max. length of engine see the engine outline drawing

Length of engine with PTO see corresponding space requirement

Fig. 5.02.01b: Space requirement for the engine 517 18 82-0.0.0

Crane beam for overhaul of turbocharger

For the overhaul of a turbocharger, a crane beam with trolleys is required at each end of the turbocharger.

Two trolleys are to be available at the compressor end and one trolley is needed at the gas inlet end.

Crane beam no. 1 is for dismantling of turbocharger components.
Crane beam no. 2 is for transporting turbocharger components.
See Figs. 5.03.01a and 5.03.02.

The crane beams can be omitted if the main engine room crane also covers the turbocharger area.

The crane beams are used and dimensioned for lifting the following components:

- Exhaust gas inlet casing
- Turbocharger inlet silencer
- Compressor casing
- Turbine rotor with bearings

The crane beams are to be placed in relation to the turbocharger(s) so that the components around the gas outlet casing can be removed in connection with overhaul of the turbocharger(s).

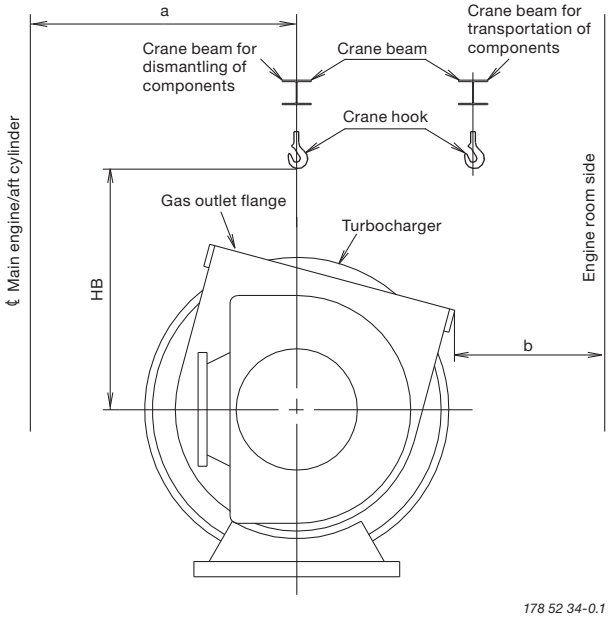

Fig. 5.03.01a: Required height and distance

The crane beam can be bolted to brackets that are fastened to the ship structure or to columns that are located on the top platform of the engine.

The lifting capacity of the crane beam for the heaviest component 'W', is indicated in Fig. 5.03.01b for the various turbocharger makes. The crane beam shall be dimensioned for lifting the weight 'W' with a deflection of some 5 mm only.

HB indicates the position of the crane hook in the vertical plane related to the centre of the turbocharger. HB and b also specifies the minimum space for dismantling.

For engines with the turbocharger(s) located on the exhaust side, EoD No. 4 59 122, the letter 'a' indicates the distance between vertical centrelines of the engine and the turbocharger.

MAN B&W			
	Units	**TCA77**	**TCA88**
W	kg	2,000	3,000
HB	mm	1,800	2,000
b	m	800	1,000

ABB				
	Units	**TPL80**	**TPL85**	**TPL91**
W	kg	1,500	3,000	4,500
HB	mm	1,900	2,200	2,350
b	m	800	1,000	1,100

ABB			
	Units	**A180**	**A185**
W	kg	Available on request	
HB	mm		
b	m		

Mitsubishi				
	Units	**MET66**	**MET71**	**MET90**
W	kg	1,500	1,800	3,500
HB	mm	1,800	1,800	2,200
b	m	800	800	800

The figures 'a' are stated on the 'Engine and Gallery Outline' drawing, Section 5.06.

Fig. 5.03.01b: Example of required height and distance and weight based on S80ME-C and S80MC-C engines.

For data on other engines, please see section 5.03, Fig. 5.03.01b of the specific engine Project Guide.

Crane beam for turbochargers

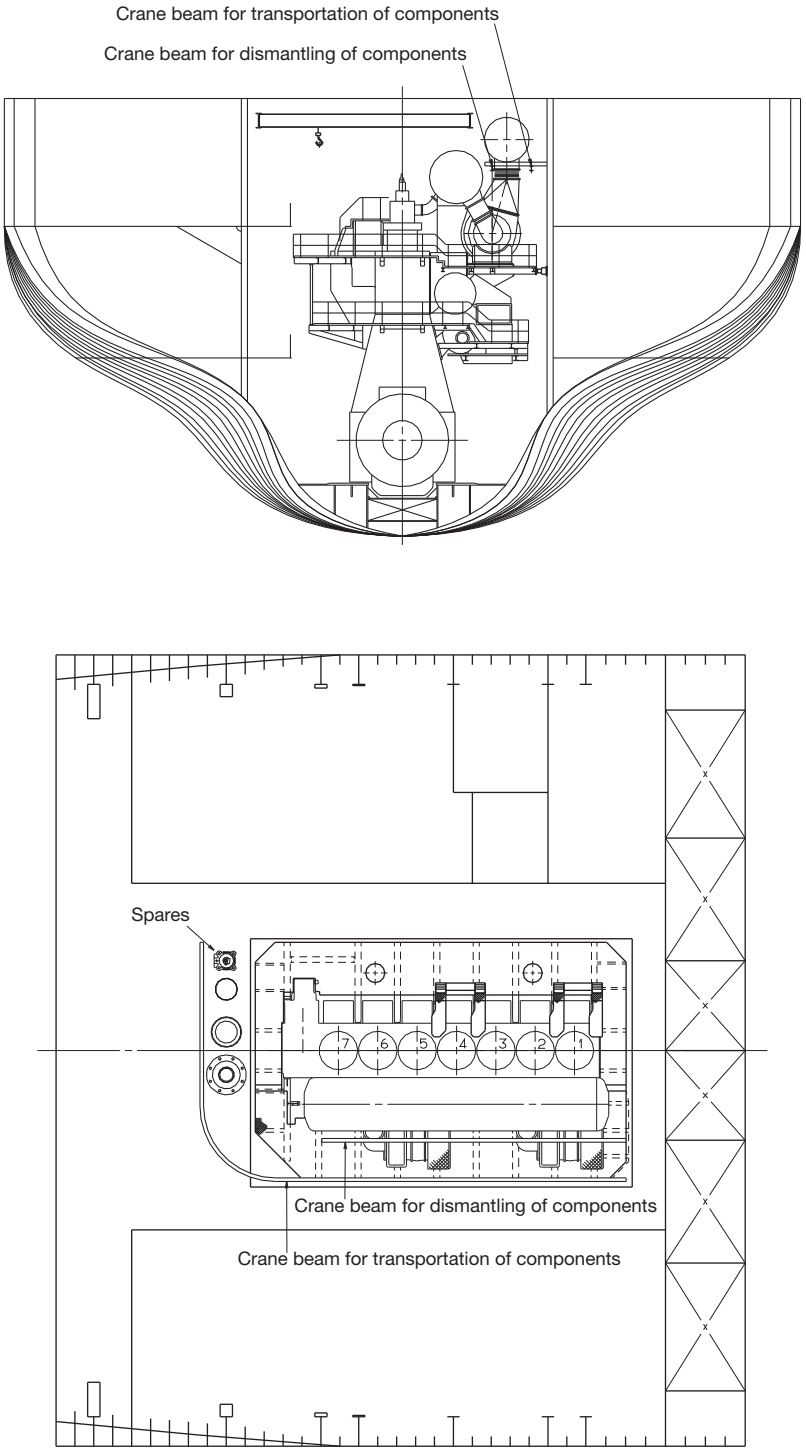

178 52 74-6.0

Fig. 5.03.02: Crane beam for turbocharger

Crane beam for overhaul of air cooler

For 98-50 engines

Overhaul/exchange of scavenge air cooler.

Valid for air cooler design for the following engines with more than one turbochargers mounted on the exhaust side.

1. Dismantle all the pipes in the area around the air cooler.
2. Dismantle all the pipes around the inlet cover for the cooler.
3. Take out the cooler insert by using the above placed crane beam mounted on the engine.
4. Turn the cooler insert to an upright position.
5. Dismantle the platforms below the air cooler.
6. Lower down the cooler insert between the gallery brackets and down to the engine room floor.
   Make sure that the cooler insert is supported, e.g. on a wooden support.
7. Move the air cooler insert to an area covered by the engine room crane using the lifting beam mounted below the lower gallery of the engine.
8. By using the engine room crane the air cooler insert can be lifted out of the engine room.

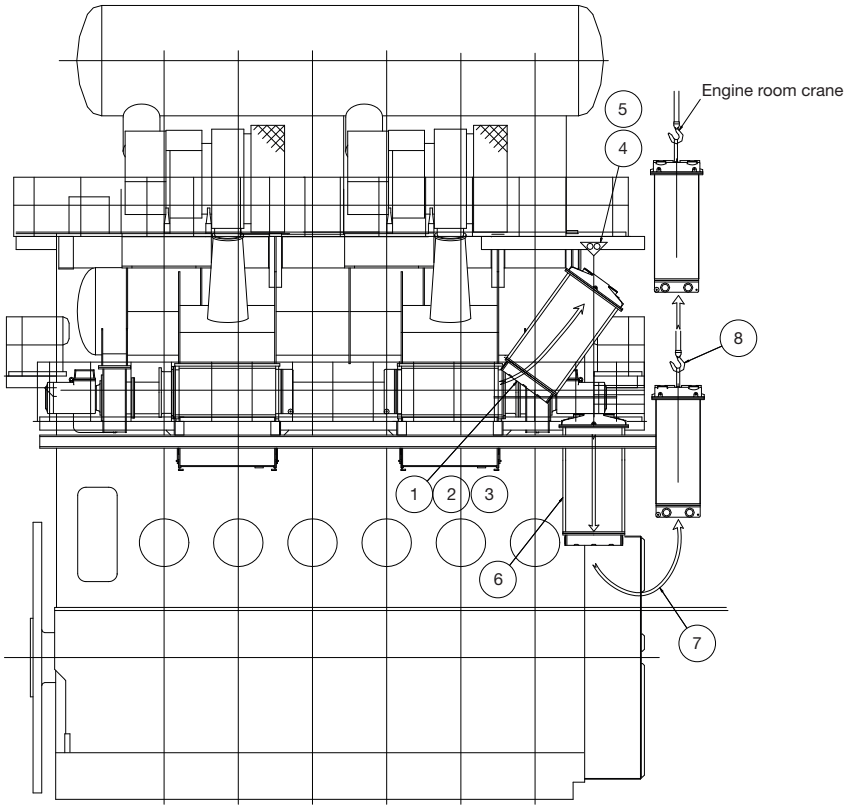

Fig.: 5.03.03: Crane beam for overhaul of air cooler, turbochargers located on exhaust side of the engine 178 52 73-4.0

Crane beam for overhaul of air cooler

For 50 engines

Overhaul/exchange of scavenge air cooler.

The text and figures are for guidance only.

Valid for all engines with aft mounted Turbocharger.

1. Dismantle all the pipes in the area around the air cooler.

2. Dismantle all the pipes around the inlet cover for the cooler.

3. Take out the cooler insert by using the above placed crane beam mounted on the engine.

4. Turn the cooler insert to an upright position.

5. By using the engine room crane the air cooler insert can be lifted out of the engine room.

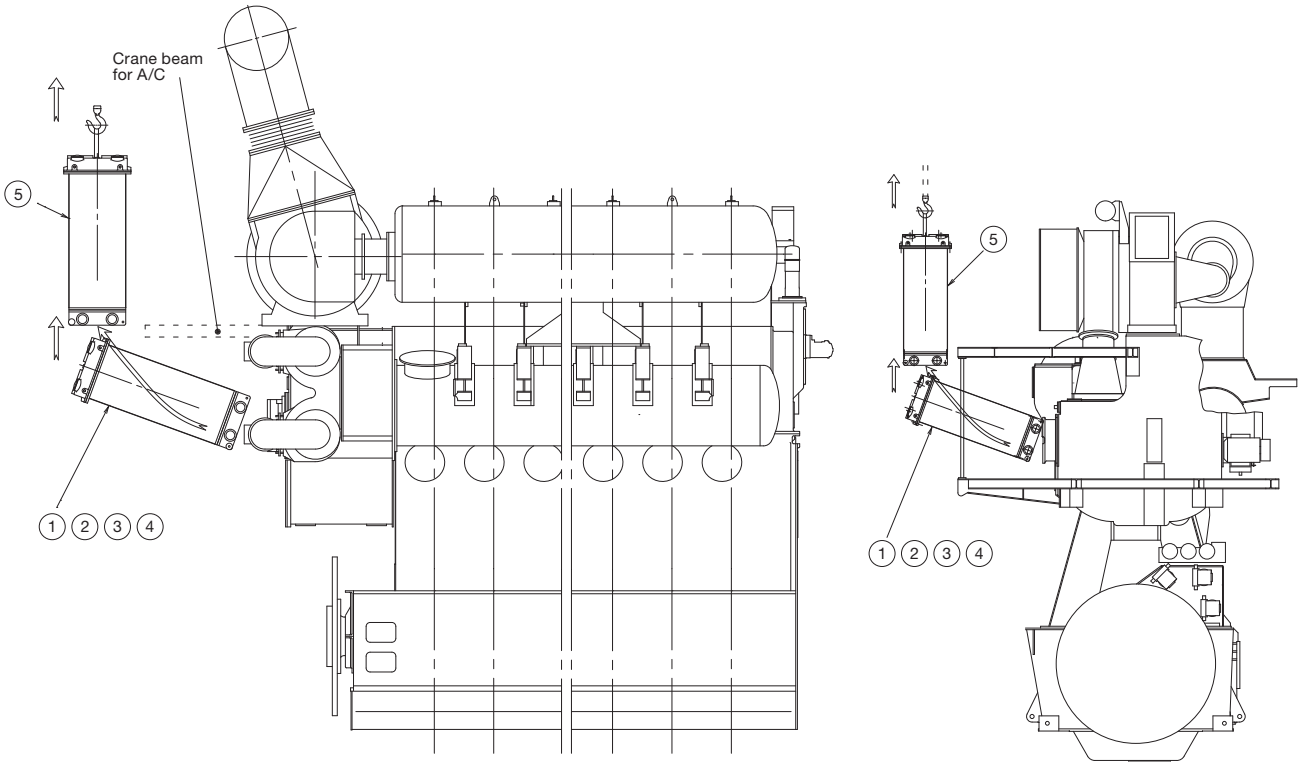

Fig.: 5.03.04: Crane beam for overhaul of air cooler, turbocharger located on aft end of the engine 517 93 99-9.0.0

Engine room crane

The crane hook travelling area must cover at least the full length of the engine and a width in accordance with dimension A given on the drawing (see cross-hatched area).

It is furthermore recommended that the engine room crane can be used for transport of heavy spare parts from the engine room hatch to the spare part stores and to the engine.
See example on this drawing.

The crane hook should at least be able to reach down to a level corresponding to the centre line of the crankshaft.

For overhaul of the turbocharger(s), trolley mounted chain hoists must be installed on a separate crane beam or, alternatively, in combination with the engine room crane structure, see separate drawing with information about the required lifting capacity for overhaul of turbochargers.

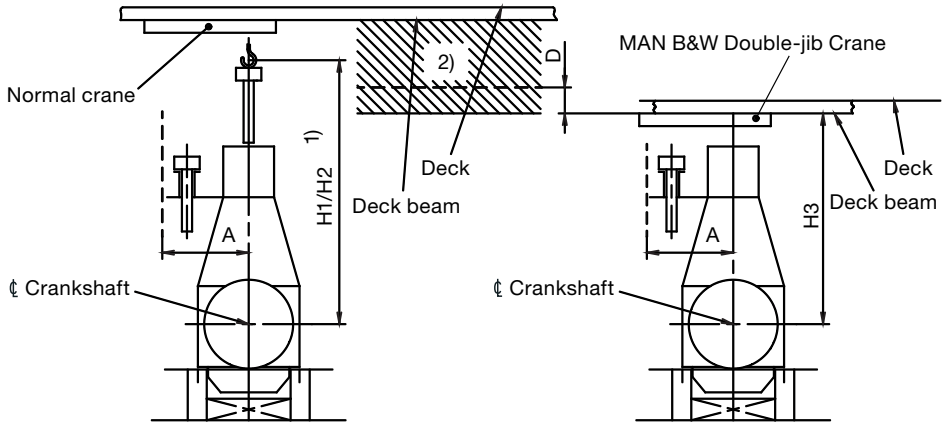

1) The lifting tools for the engine are designed to fit together with a standard crane hook with a lifting capacity in accordance with the figure stated in the table. If a larger crane hook is used, it may not fit directly to the overhaul tools, and the use of an intermediate shackle or similar between the lifting tool and the crane hook will affect the requirements for the minimum lifting height in the engine room (dimension H).

2) The hatched area shows the height where an MAN B&W Double-Jib Crane has to be used.

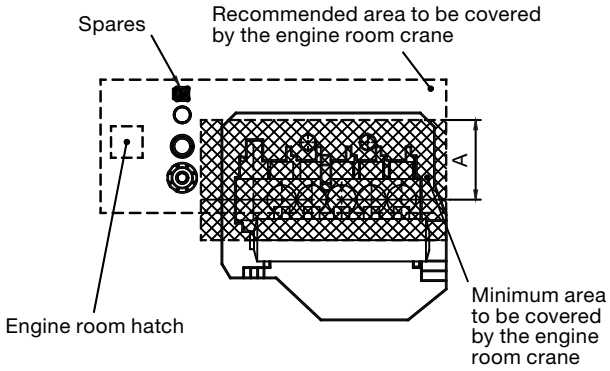

519 24 62-8.0.0

Fig. 5.04.01: Engine room crane

	Mass in kg including lifting tools			Crane capacity in tons selected in accordance with DIN and JIS standard capacities		Crane operating width in mm	Normal Crane Height to crane hook in mm for:		MAN B&W Double-Jib Crane	
							Normal lifting procedure	Reduced height lifting procedure involving tilting of main components (option)	Building-in height in mm	
						A	H1	H2	H3	D
Engine type	Cylinder cover complete with exhaust valve	Cylinder liner with cooling jacket	Piston with rod and stuffing box	Normal crane	MAN B&W Double-Jib Crane	Minimum distance	Minimum height from centre line crankshaft to centre line crane hook	Minimum height from centre line crankshaft to centre line crane hook	Minimum height from centre line crankshaft to underside deck beam	Additional height required for removal of exhaust valve completewithout removing any exhaust stud
S70ME-C8-GI	5,525	5,625	2,550	6.3	2x3.0	2,850	12,550	11,675	11,425	575
S65ME-C8-GI	3,275	4,425	2,200	5.0	2x2.5	2,850	11,950	11,225	11,025	450
S60ME-C8-GI	2,950	3,425	1,650	4.0	2x2.0	2,650	10,750	10,000	9,725	150

Table 5.04.02: Engine room crane data.

The crane hook travelling area must cover at least the full length of the engine and a width in accordance with dimension A given on the drawing, see cross-hatched area.

It is furthermore recommended that the engine room crane can be used for transport of heavy spare parts from the engine room hatch to the spare part stores and to the engine. See example on this drawing.

The crane hook should at least be able to reach down to a level corresponding to the centre line of the crankshaft.

For overhaul of the turbocharger(s), trolley mounted chain hoists must be installed on a separate crane beam or, alternatively, in combination with the engine room crane structure, see ‘Crane beam for overhaul of turbochargers’ with information about the required lifting capacity for overhaul of turbocharger(s).

Overhaul with MAN B&W Double-Jib crane

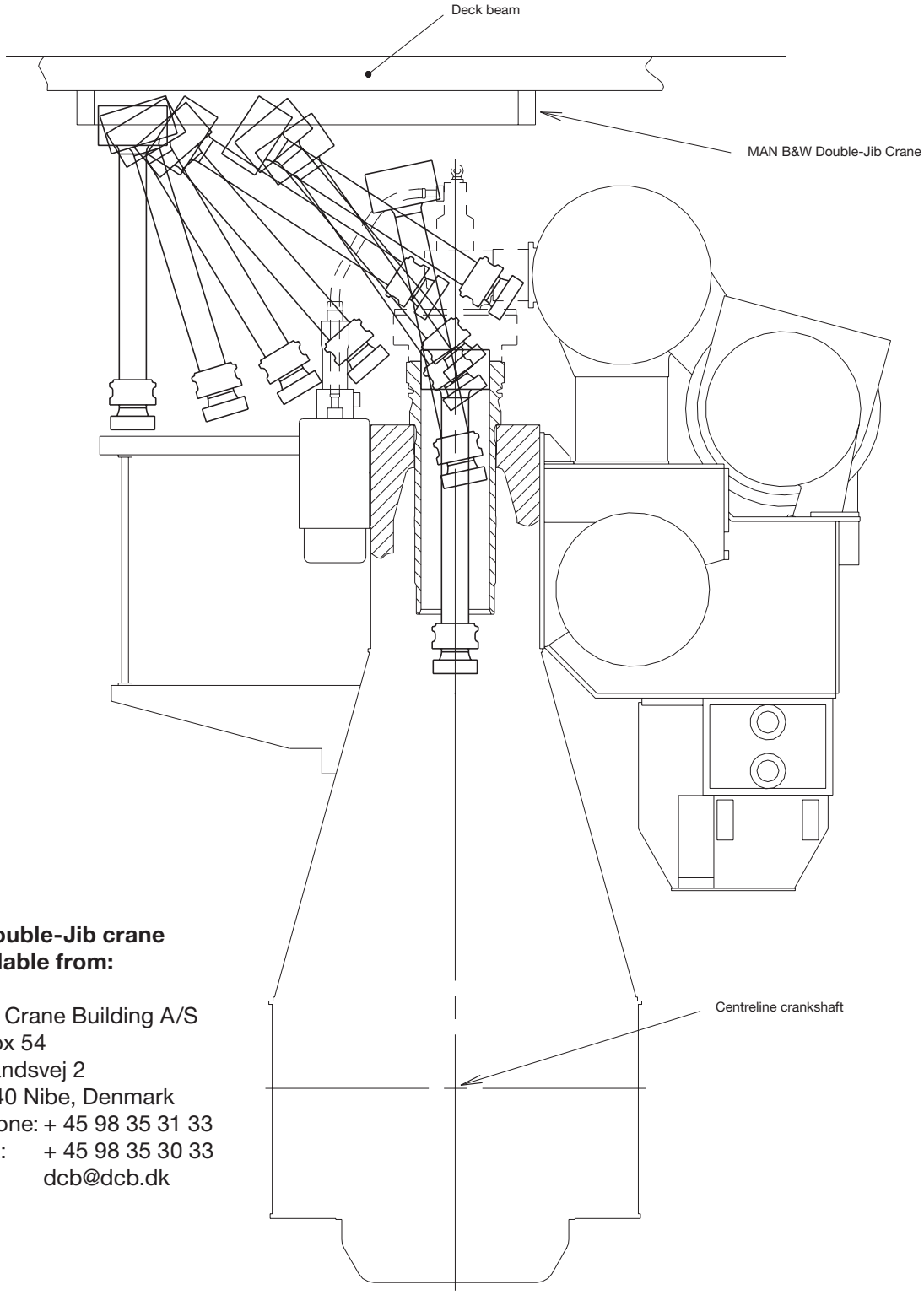

The Double-Jib crane is available from:

Danish Crane Building A/S
P.O. Box 54
Østerlandsvej 2
DK-9240 Nibe, Denmark
Telephone: + 45 98 35 31 33
Telefax: + 45 98 35 30 33
E-mail: dcb@dcb.dk

178 24 86-3.0

Fig. 5.04.03: Overhaul with Double-Jib crane

Engine Outline

Please note that the information is to be found in section 1.03 and in the Project Guide for the relevant engine type.

The latest version of the dimensioned drawing is available for download at www.mandiesel-turbo.com under ‘Products’ → ‘Marine Engines & Systems’ → ‘Low Speed’ → ‘Installation Drawings’. First choose engine series, then engine type and select ‘Outline drawing’ for the actual number of cylinders and type of turbocharger installation in the list of drawings available for download.

Gallery Outline

Please note that the information is to be found in the Project Guide for the relevant engine type.

The latest version of the dimensioned drawing is available for download at www.mandiesel-turbo.com under ‘Products’ → ‘Marine Engines & Systems’ → ‘Low Speed’ → ‘Installation Drawings’. First choose engine series, then engine type and select ‘Outline drawing’ for the actual number of cylinders and type of turbocharger installation in the list of drawings available for download.

Centre of Gravity

Please note that the information is to be found in the Project Guide for the relevant engine type.

Water and Oil in Engine

Please note that the information is to be found in the Project Guide for the relevant engine type.

Engine Pipe Connections

Please note that the information is to be found in the Project Guide for the relevant engine type.

Counterflanges

Please note that the information is to be found in the Project Guide for the relevant engine type.

Engine Seating and Holding Down Bolts

Please note that the latest version of most of the drawings of this section is available for download at www.mandieselturbo.com under 'Products' → 'Marine Engines & Systems' → 'Low Speed' → 'Installation Drawings'. First choose engine series, then engine type and select 'Engine seating' in the general section of the list of drawings available for download.

Engine Seating and Arrangement of Holding Down Bolts

The dimensions of the seating stated in Fig. 5.12.01 are for guidance only.

Further information is to be found in the Project Guide for the relevant engine type.

Engine Seating Profile

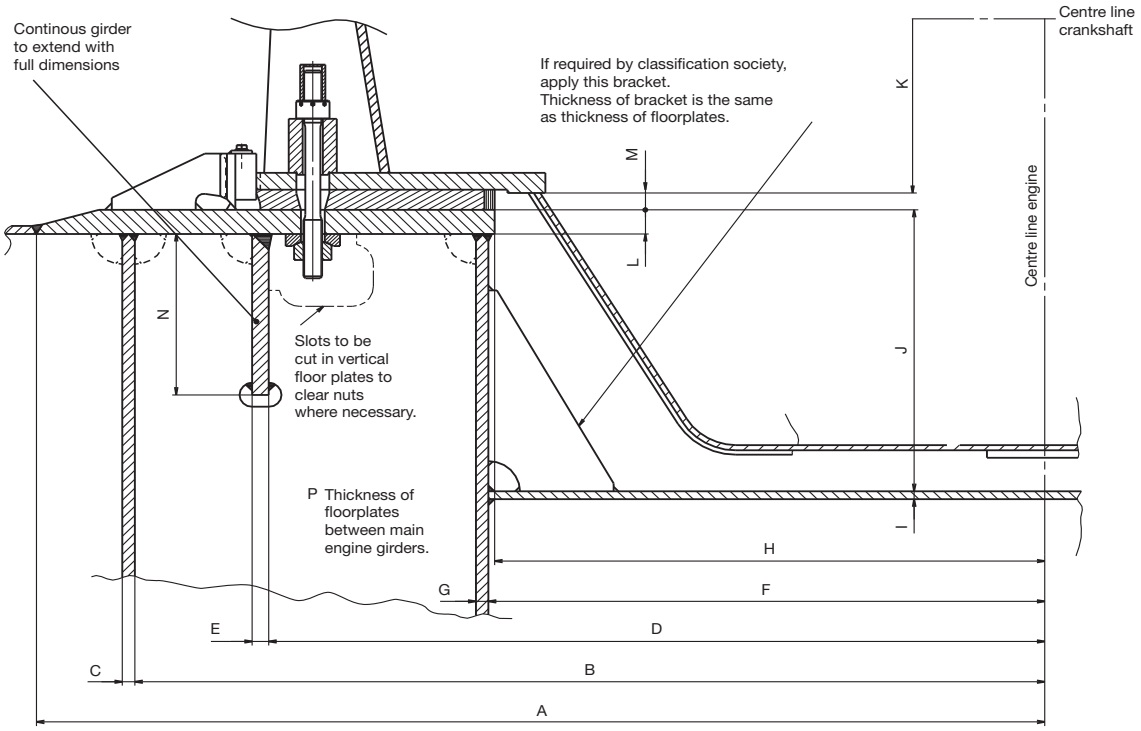

Fig. 5.12.01: Profile of engine seating, epoxy chocks

178 06 43-4.3

Engine type	A	B	C	D	E	F	G	H	I	J	K	L	M	N	P
S70ME-C8-GI	2,880	2,485	36	1,890	45	1,530	36	1,515	22	805	1,520	65	50	400	34
S65ME-C8-GI	2,695	2,310	36	1,755	45	1,420	36	1,405	22	800	1,410	60	50	370	34
S60ME-C8-GI	2,410	2,175	30	1,855	40	1,330	30	1,315	20	700	1,300	60	50	400	25

Dimensions are stated in mm

Table 5.12.02: Engine seating data

Engine Top Bracing

The so-called guide force moments are caused by the transverse reaction forces acting on the crossheads due to the connecting rod and crankshaft mechanism. When the piston of a cylinder is not exactly in its top or bottom position the gas force from the combustion, transferred through the connecting rod, will have a component acting on the crosshead and the crankshaft perpendicularly to the axis of the cylinder. Its resultant is acting on the guide shoe and together they form a guide force moment.

The moments may excite engine vibrations moving the engine top athwart ships and causing a rocking (excited by H-moment) or twisting (excited by X-moment) movement of the engine. For engines with less than seven cylinders, this guide force moment tends to rock the engine in the transverse direction, and for engines with seven cylinders or more, it tends to twist the engine.

The guide force moments are harmless to the engine except when resonance vibrations occur in the engine/double bottom system. They may, however, cause annoying vibrations in the superstructure and/or engine room, if proper countermeasures are not taken.

As a detailed calculation of this system is normally not available, MAN Diesel recommends that top bracing is installed between the engine's upper platform brackets and the casing side.

However, the top bracing is not needed in all cases. In some cases the vibration level is lower if the top bracing is not installed. This has normally to be checked by measurements, i.e. with and without top bracing.

If a vibration measurement in the first vessel of a series shows that the vibration level is acceptable without the top bracing, we have no objection to the top bracing being removed and the rest of the series produced without top bracing. It is our experience that especially the 7-cylinder engine will often have a lower vibration level without top bracing.

Without top bracing, the natural frequency of the vibrating system comprising engine, ship's bottom, and ship's side is often so low that resonance with the excitation source (the guide force moment) can occur close to the normal speed range, resulting in the risk of vibration.

With top bracing, such a resonance will occur above the normal speed range, as the natural frequencies of the double bottom/main engine system will increase. The impact of vibration is thus lowered.

The top bracing is normally installed on the exhaust side of the engine, but can alternatively be installed on the manoeuvring side. A combination of exhaust side and manoeuvring side installation is also possible.

The top bracing system is installed either as a mechanical top bracing or a hydraulic top bracing. Both systems are described below.

Mechanical top bracing

The mechanical top bracing comprises stiff connections between the engine and the hull.

The top bracing stiffener consists of a double bar tightened with friction shims at each end of the mounting positions. The friction shims allow the top bracing stiffener to move in case of displacements caused by thermal expansion of the engine or different loading conditions of the vessel. Furthermore, the tightening is made with a well-defined force on the friction shims, using disc springs, to prevent overloading of the system in case of an excessive vibration level.

The mechanical top bracing is to be made by the shipyard in accordance with MAN Diesel instructions.

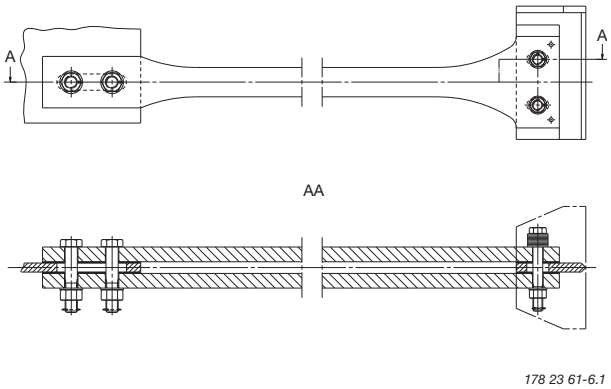

Fig. 5.13.01: Mechanical top bracing stiffener. Option: 4 83 112

Hydraulic top bracing

The hydraulic top bracing is an alternative to the mechanical top bracing used mainly on engines with a cylinder bore of 50 or more. The installation normally features two, four or six independently working top bracing units.

The top bracing unit consists of a single-acting hydraulic cylinder with a hydraulic control unit and an accumulator mounted directly on the cylinder unit.

The top bracing is controlled by an automatic switch in a control panel, which activates the top bracing when the engine is running. It is possible to programme the switch to choose a certain rpm range, at which the top bracing is active. For service purposes, manual control from the control panel is also possible.

When active, the hydraulic cylinder provides a pressure on the engine in proportion to the vibration level. When the distance between the hull and engine increases, oil flows into the cylinder under pressure from the accumulator. When the distance decreases, a non-return valve prevents the oil from flowing back to the accumulator, and the pressure rises. If the pressure reaches a preset maximum value, a relief valve allows the oil to flow back to the accumulator, hereby maintaining the force on the engine below the specified value.

By a different pre-setting of the relief valve, the top bracing is delivered in a low-pressure version (26 bar) or a high-pressure version (40 bar).

The top bracing unit is designed to allow displacements between the hull and engine caused by thermal expansion of the engine or different loading conditions of the vessel.

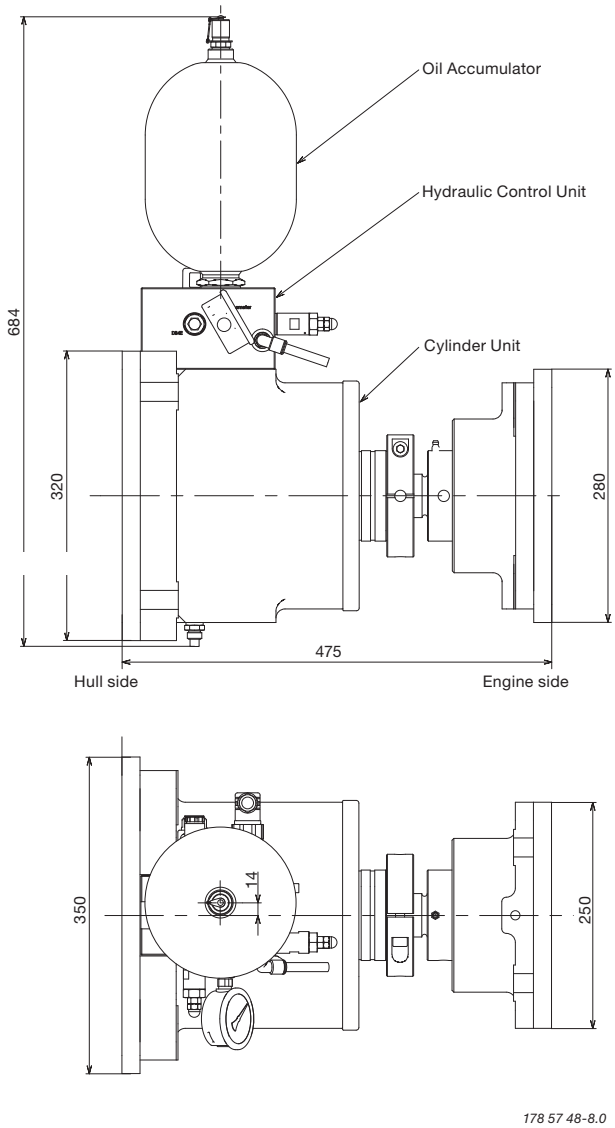

Fig. 5.13.02: Outline of a hydraulic top bracing unit. The unit is installed with the oil accumulator pointing either up or down. Option: 4 83 123

Mechanical top bracing arrangement

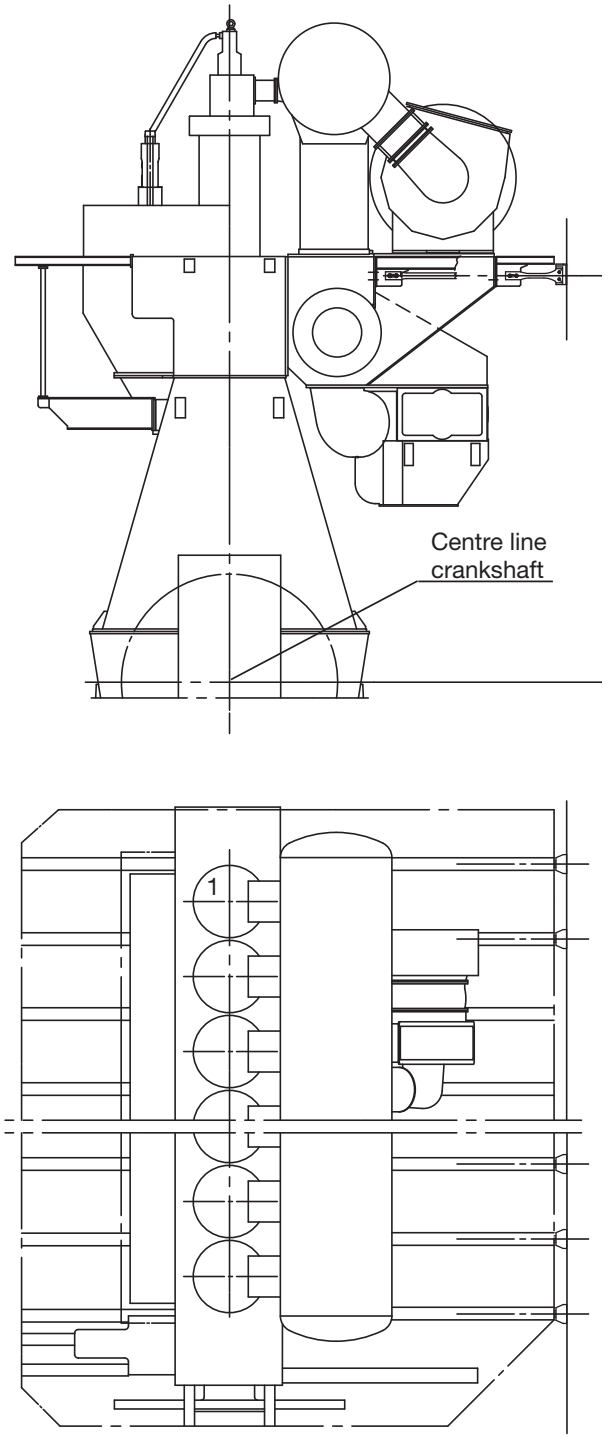

Fig. 5.15.01: Mechanical top bracing arrangement

Force per mechanical top bracing and maximum horizontal deflection at attachment to the hull									
Cyl.:	**5**	**6**	**7**	**8**	**9**	**10**	**11**	**12**	**Force per bracing in kN**
Motor type	**Number of top bracings**								
S70ME-C-GI	4	5	6	6					126
S65ME-C-GI	4	5	6	6					93
S60ME-C-GI	4	5	6	6					93

Table 5.15.02: Mechanical top bracing force and deflection

Hydraulic top bracing arrangement

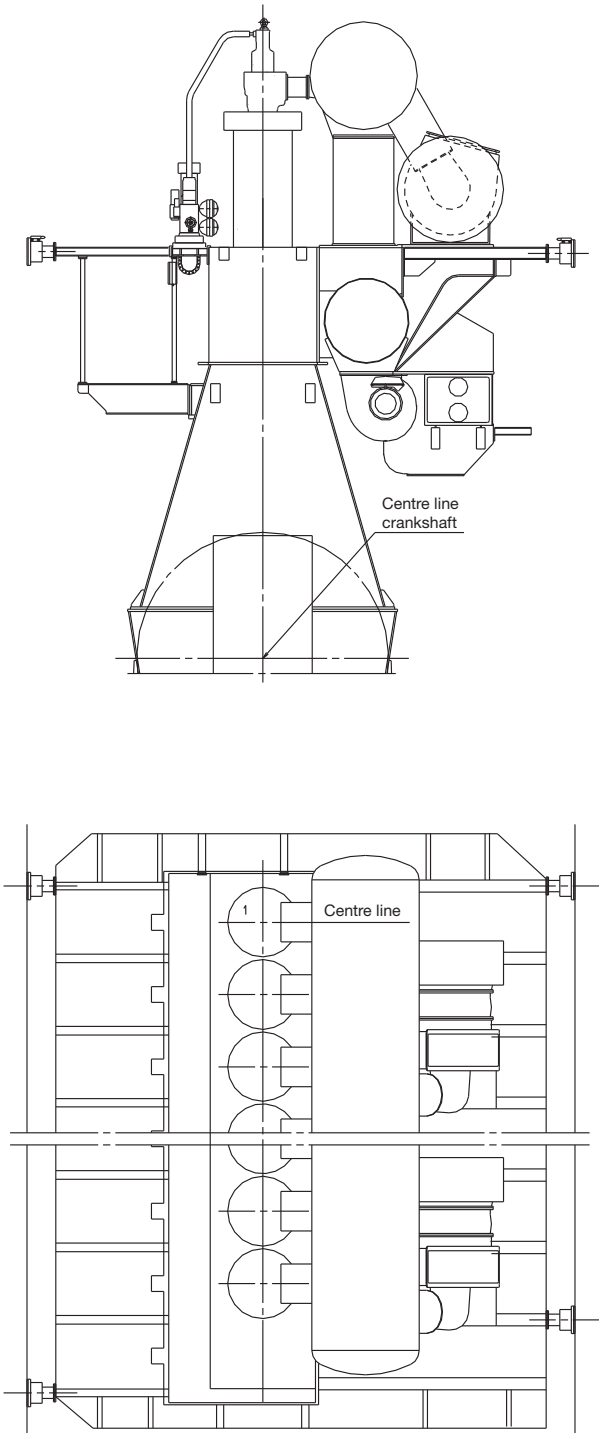

Fig. 5.15.01: Hydraulic top bracing arrangement

Force per hydraulic top bracing and maximum horizontal deflection at attachment to the hull										
Cyl.:	**5**	**6**	**7**	**8**	**9**	**10**	**11**	**12**	**14**	**Force per bracing in kN**
Motor type	**Number of top bracings**									
S70ME-C-GI	4	4	4	2						125,7
S65ME-C-GI	4	4	4	4						81,7
S60ME-C-GI	4	4	4	4						81,7

Table 5.15.02: Hydraulic top bracing force and deflection

Components for Engine Control System

Installation of ECS in the Engine Control Room

The following items are to be installed in the ECR (Engine Control Room):

- 2 pcs EICU (Engine Interface Control Unit)
  (1 pcs only for ME-B engines)
- 1 pcs MOP (Main Operating Panel)
  Touch display, 15”
  PC unit
- 1 pcs Track ball for MOP
- 1 pcs PMI system
  Display, 19”
  PC unit
- 1 pcs Back-up MOP
  Display, 15”
  PC unit
  Keyboard
- 1 pcs Printer
- 1 pcs Ethernet Hub

The EICU functions as an interface unit to ECR related systems such as AMS (Alarm and Monitoring System), RCS (Remote Control System) and Safety System. On ME-B engines the EICU also controls the HPS.

The MOP is the operator’s interface to the ECS. From there the operator can control and see status of the engine and the ECS. The MOP is a PC with a flat touch screen.

The Back-up MOP consists of a PC unit with keyboard and display and serves as a back-up in case the MOP should break down.

The PMI offline system is equipped with a standard PC. The PMI system serves as a pressure analyse system. See Section 18.02.

Optional items to be mounted in the ECR include the CoCoS-EDS which can be purchased separately and applied on the PC for the PMI offline system. See Section 18.03.

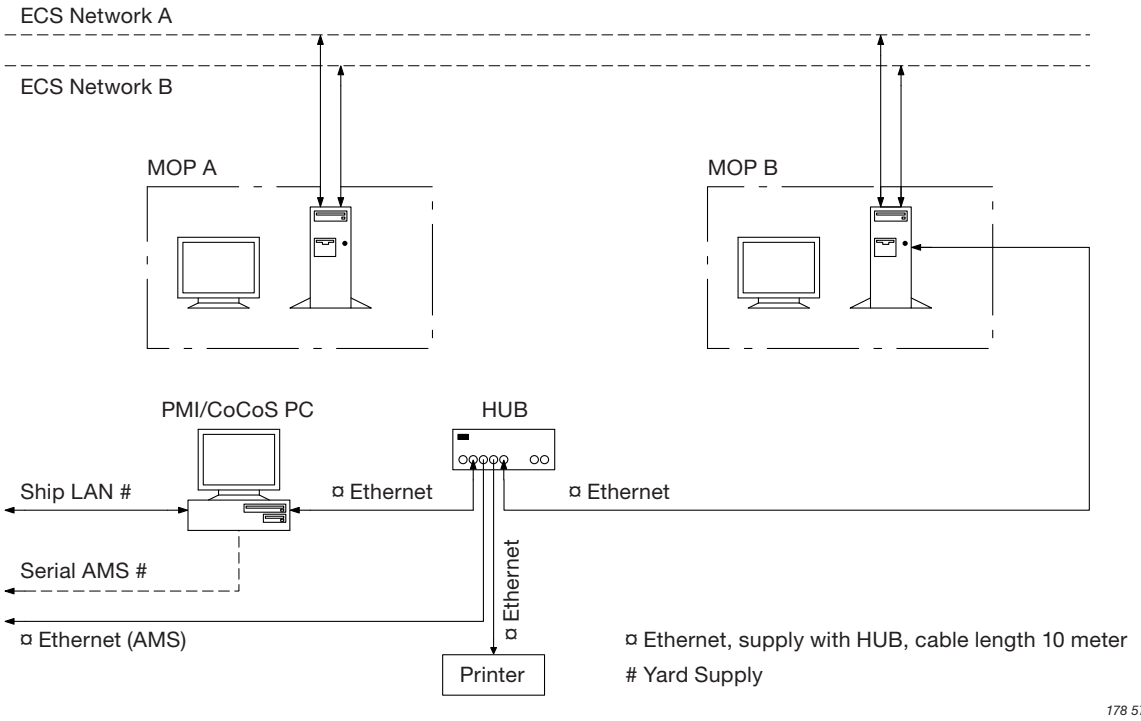

Fig. 5.16.01 Network and PC components for the ME/ME-B Engine Control System

MOP (Main Operating Panel)

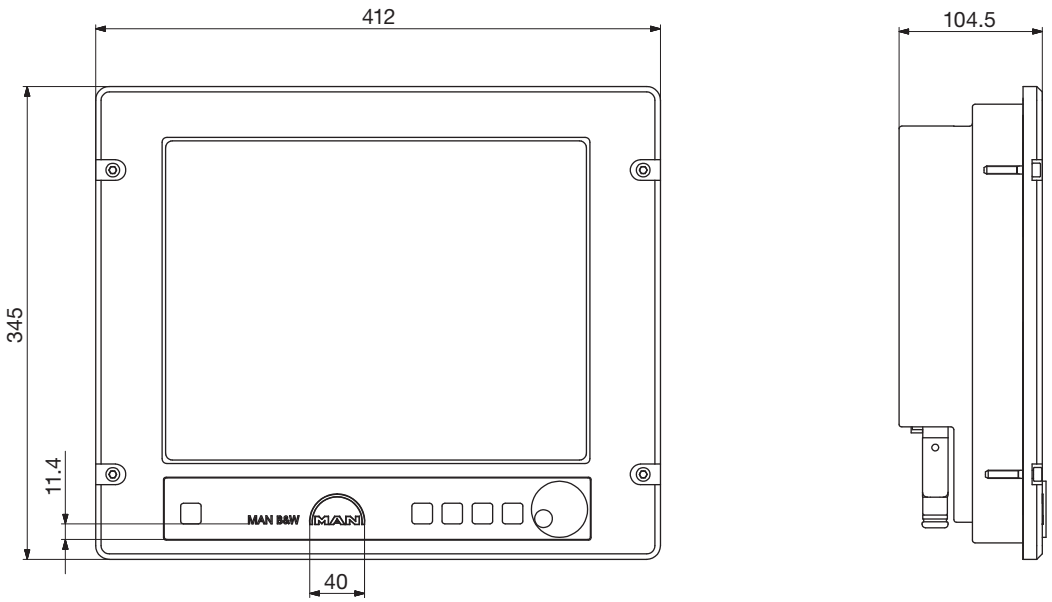

Track ball

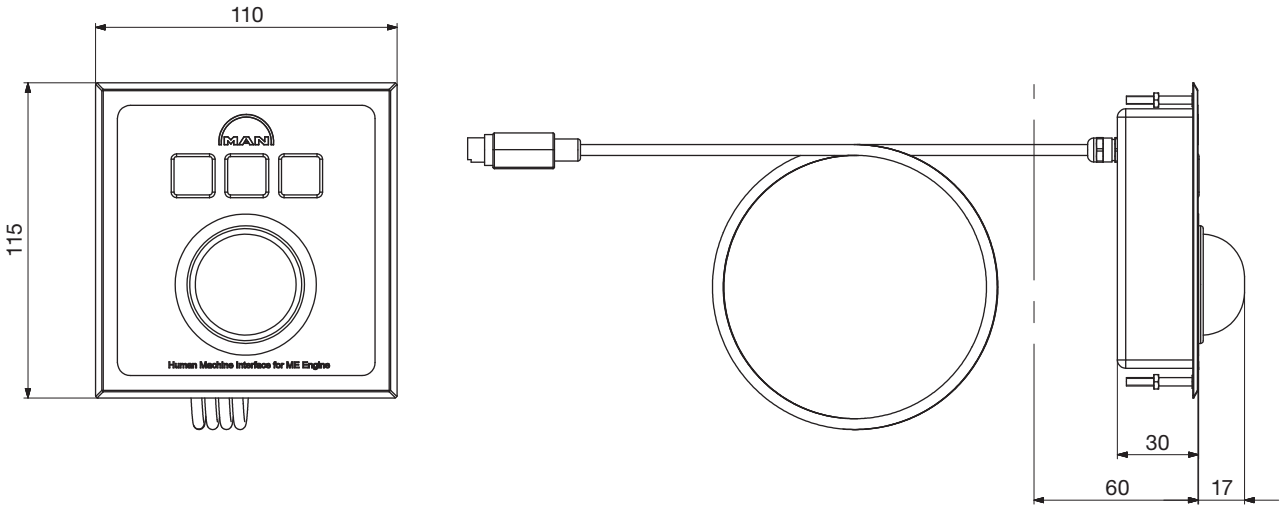

178 57 48-1.0

Fig. 5.16.02 MOP and track ball for the ME/ME-B Engine Control System

EICU (Engine Interface Control Unit) Cabinet

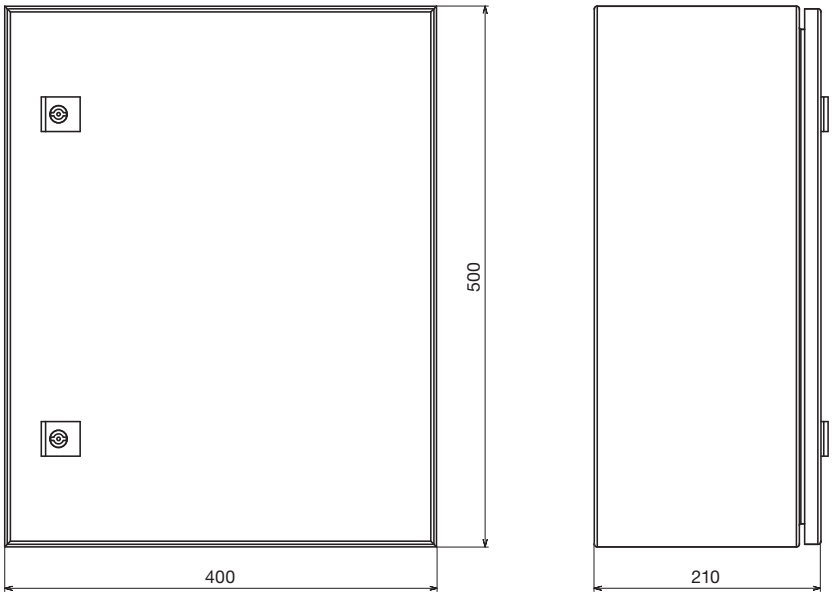

MOP PC unit

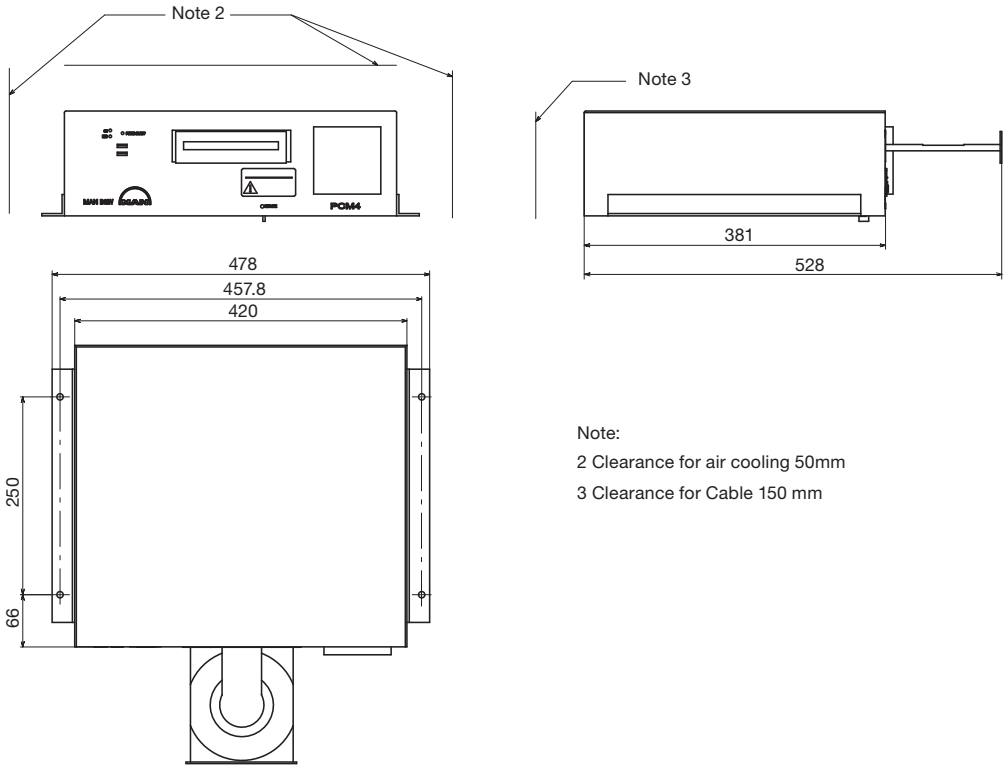

178 50 14-7.1

Fig. 5.16.03 The EICU cabinet and MOP PC unit for the ME/ME-B Engine Control System

PC parts for PMI/CoCoS

19” Display

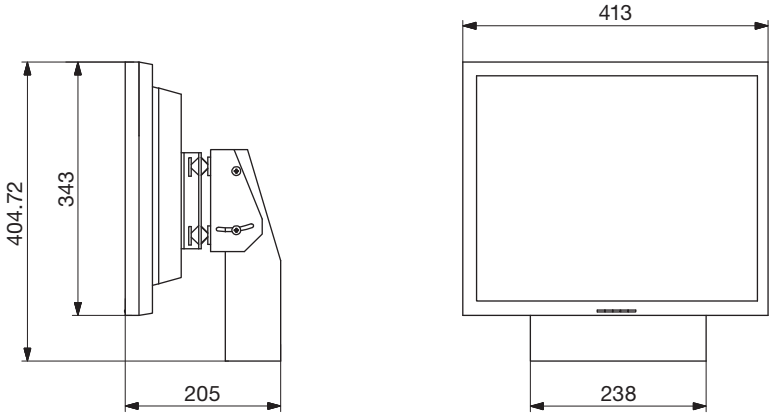

PC unit

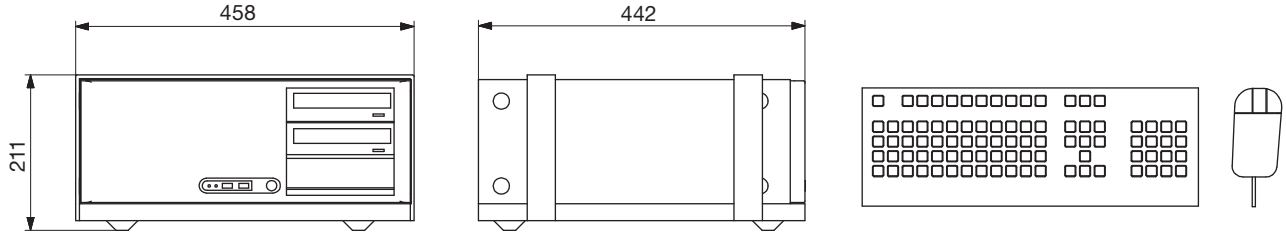

Printer

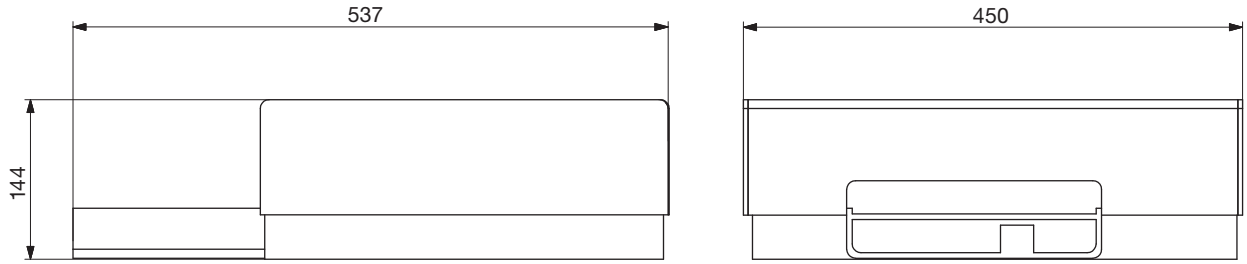

178 57 49-3.0

Fig. 5.16.04 PMI/CoCoS PC unit, display and printer for the ME/ME-B Engine Control System

Shaftline Earthing Device

Scope and field of application

A difference in the electrical potential between the hull and the propeller shaft will be generated due to the difference in materials and to the propeller being immersed in sea water.

In some cases, the difference in the electrical potential has caused spark erosion on the thrust, main bearings and journals of the crankshaft of the engine.

In order to reduce the electrical potential between the crankshaft and the hull and thus prevent spark erosion, a highly efficient shaftline earthing device must be installed.

The shaftline earthing device should be able to keep the electrical potential difference below 50 mV DC. A shaft-to-hull monitoring equipment with a mV-meter and with an output signal to the alarm system must be installed so that the potential and thus the correct function of the shaftline earthing device can be monitored.

Note that only one shaftline earthing device is needed in the propeller shaft system.

Design description

The shaftline earthing device consists of two silver slip rings, two arrangements for holding brushes including connecting cables and monitoring equipment with a mV-meter and an output signal for alarm.

The slip rings should be made of solid silver or back-up rings of cobber with a silver layer all over. The expected life span of the silver layer on the slip rings should be minimum 5 years.

The brushes should be made of minimum 80% silver and 20% graphite to ensure a sufficient electrical conducting capability.

Resistivity of the silver should be less than 0.1μ Ohm x m. The total resistance from the shaft to the hull must not exceed 0.001 Ohm.

Cabling of the shaftline earthing device to the hull must be with a cable with a cross section not less than 45 mm^2. The length of the cable to the hull should be as short as possible.

Monitoring equipment should have a 4-20 mA signal for alarm and a mV-meter with a switch for changing range. Primary range from 0 to 50 mV DC and secondary range from 0 to 300 mV DC.

When the shaftline earthing device is working correctly, the electrical potential will normally be within the range of 10-50 mV DC depending of propeller size and revolutions.

The alarm set-point should be 80 mV for a high alarm. The alarm signals with an alarm delay of 30 seconds and an alarm cut-off, when the engine is stopped, must be connected to the alarm system.

Connection of cables is shown in the sketch, see Fig. 5.17.01.

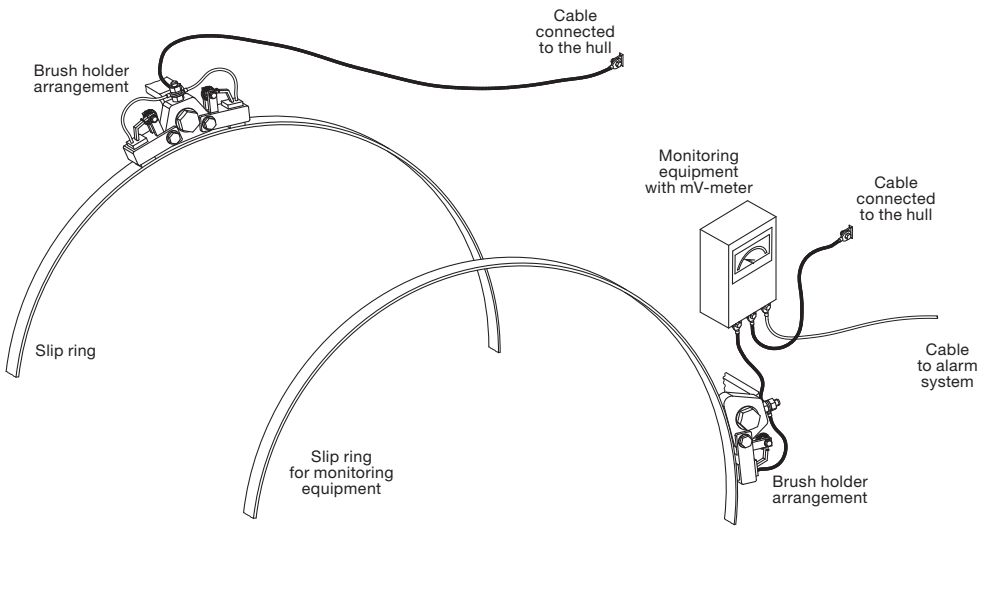

Fig. 5.17.01: Connection of cables for the shaftline earthing device

Shaftline earthing device installations

The shaftline earthing device slip rings must be mounted on the foremost intermediate shaft as close to the engine as possible, see Fig. 5.17.02

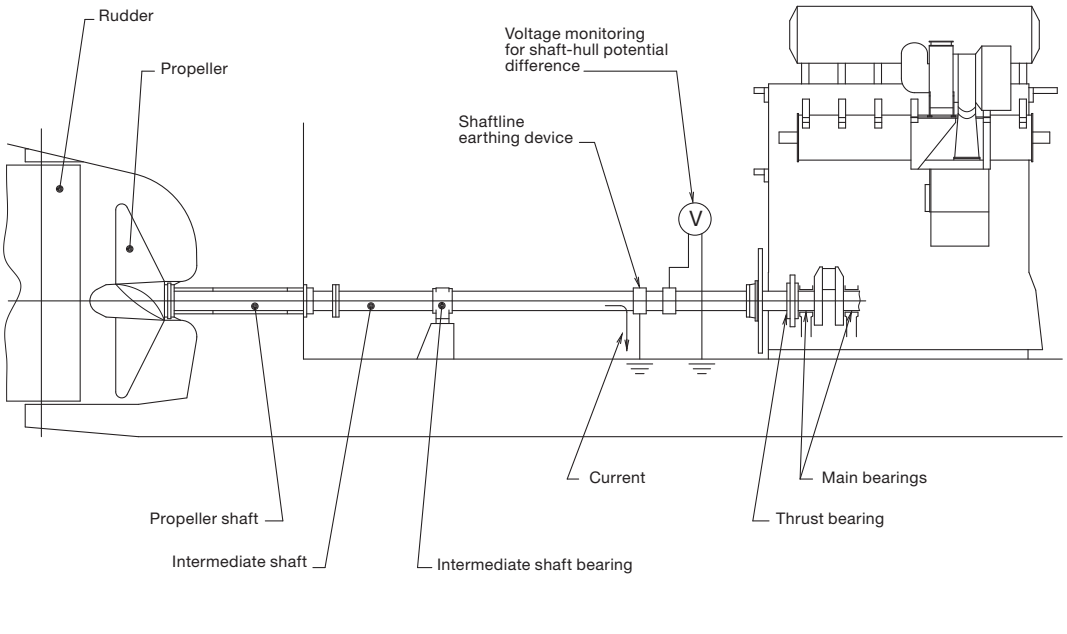

Fig. 5.17.02: Installation of shaftline earthing device in an engine plant without shaft-mounted generator

When a generator is fitted in the propeller shaft system, where the rotor of the generator is part of the intermediate shaft, the shaftline earthing device must be mounted between the generator and the engine, see Fig. 5.17.03

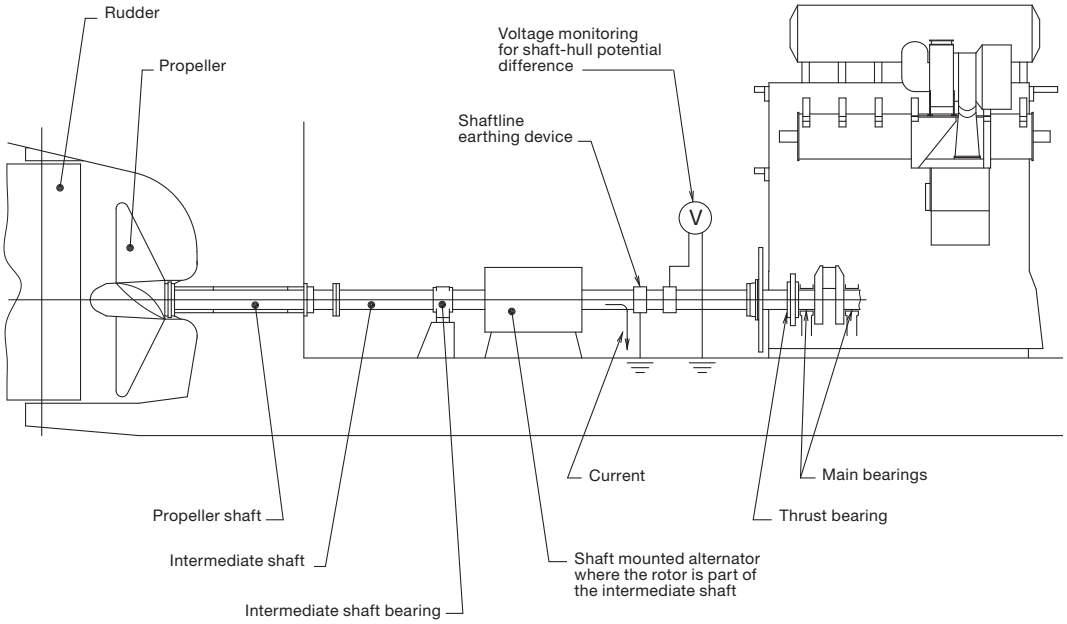

079 21 82-1.3.3.0

Fig. 5.17.03: Installation of shaftline earthing device in an engine plant with shaft-mounted generator

MAN Diesel's Alpha Controllable Pitch Propeller and Alphatronic Propulsion Control

MAN Diesel's Alpha Controllable Pitch propeller

On MAN Diesel's Alpha VBS type Controllable Pitch (CP) propeller, the hydraulic servo motor setting the pitch is built into the propeller hub. A range of different hub sizes is available to select an optimum hub for any given combination of power, revolutions and ice class.

Standard blade/hub materials are Ni-Al-bronze. Stainless steel is available as an option. The propellers are based on 'no ice class' but are available up to the highest ice classes.

VBS type CP propeller designation and range

The VBS type CP propellers are designated according to the diameter of their hubs, i.e. 'VBS2240' indicates a propeller hub diameter of 2,240 mm.

The standard VBS type CP propeller programme, its diameters and the engine power range covered is shown in Fig. 5.18.01.

The servo oil system controlling the setting of the propeller blade pitch is shown in Fig.5.18.05.

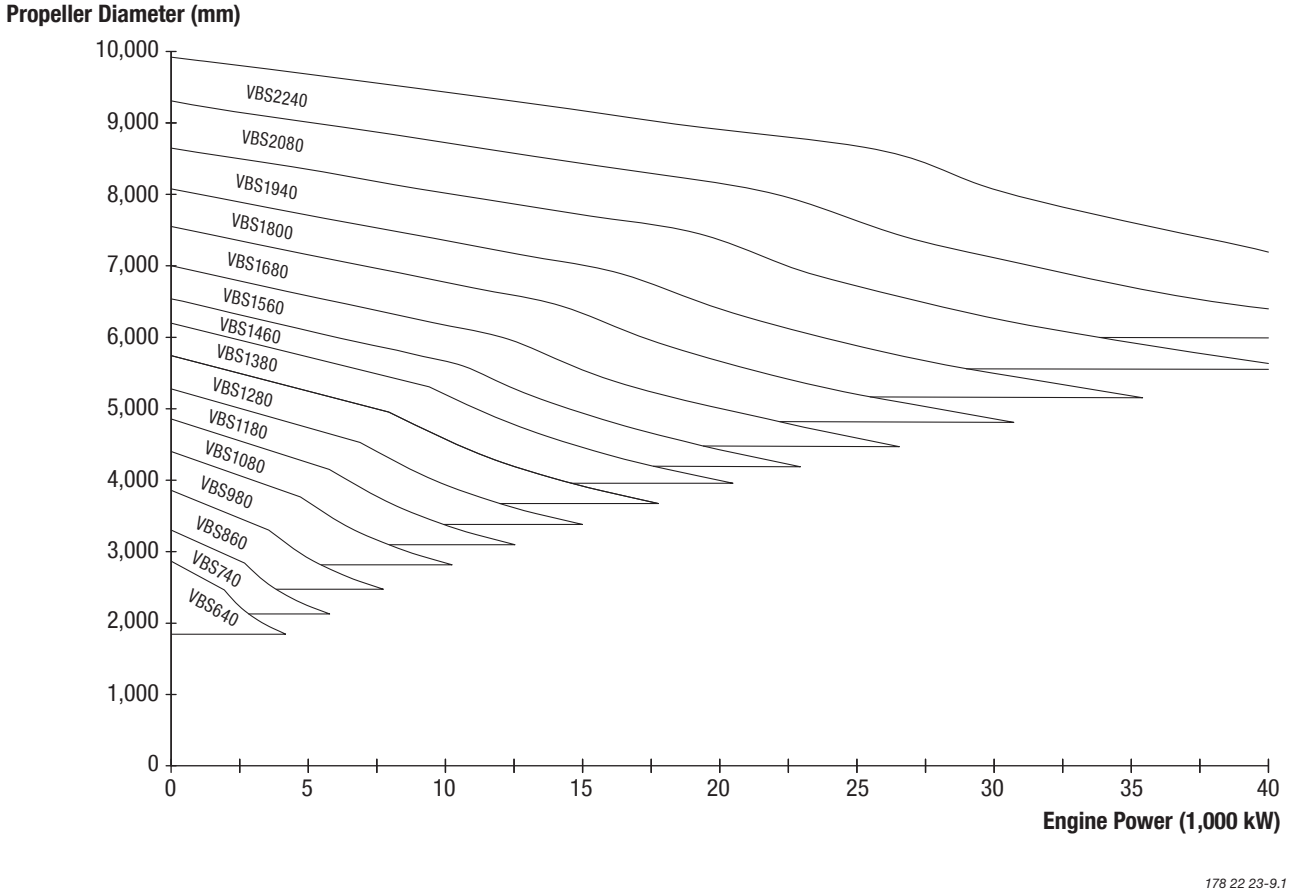

Fig. 5.18.01: VBS type Controllable Pitch (CP) propeller diameter (mm)

Data Sheet for Propeller

Identification: _____

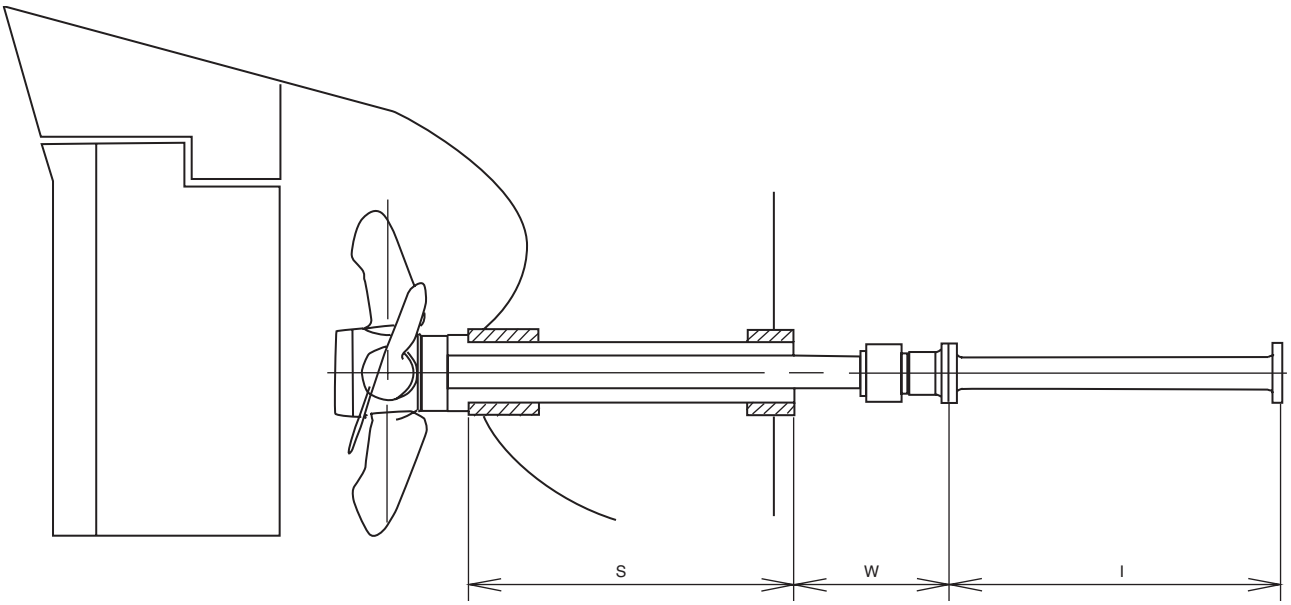

178 22 36-0.0

Fig. 5.18.02a: Dimension sketch for propeller design purposes

Type of vessel: _____
For propeller design purposes please provide us with the following information:

1. S: _____ mm
   W: _____ mm
   I: _____ mm (as shown above)

2. Stern tube and shafting arrangement layout

3. Propeller aperture drawing

4. Complete set of reports from model tank (resistance test, self-propulsion test and wake measurement). In case model test is not available the next page should be filled in.

5. Drawing of lines plan

6. Classification Society: _____
   Ice class notation: _____

7. Maximum rated power of shaft generator: kW

8. Optimisation condition for the propeller:
   To obtain the highest propeller efficiency please identify the most common service condition for the vessel.

   Ship speed: _____ kn
   Engine service load: _____ %
   Service/sea margin: _____ %
   Shaft generator service load: _____ kW
   Draft: _____ m

9. Comments:

Table 5.18.02b: Data sheet for propeller design purposes

Main Dimensions

	Symbol	Unit	Ballast	Loaded
Length between perpendiculars	LPP	m		
Length of load water line	LWL	m		
Breadth	B	m		
Draft at forward perpendicular	TF	m		
Draft at aft perpendicular	TA	m		
Displacement	o	m3		
Block coefficient (LPP)	CB	-		
Midship coefficient	CM	-		
Waterplane area coefficient	CWL	-		
Wetted surface with appendages	S	m2		
Centre of buoyancy forward of LPP/2	LCB	m		
Propeller centre height above baseline	H	m		
Bulb section area at forward perpendicular	AB	m2		

178 22 97-0.0

Table 5.18.03: Data sheet for propeller design purposes, in case model test is not available this table should be filled in

Propeller clearance

To reduce pressure impulses and vibrations emitted from the propeller to the hull, MAN Diesel recommend a minimum tip clearance as shown in Fig. 5.18.04.

For ships with slender aft body and favourable inflow conditions the lower values can be used, whereas full afterbody and large variations in wake field cause the upper values to be used.

In twin-screw ships the blade tip may protrude below the base line.

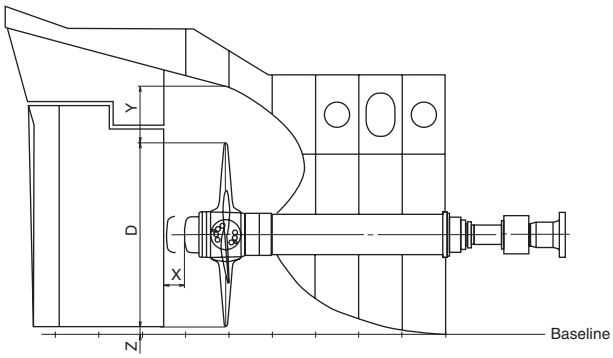

178 22 37-2.0

Hub	Dismantling of cap X mm	High skew propeller Y mm	Non-skew propeller Y mm	Baseline clearance Z mm
VBS 1280	390	15-20% of D	20-25% of D	Min. 50-100
VBS 1380	420			
VBS 1460	450			
VBS 1560	480			
VBS 1680	515			
VBS 1800	555			
VBS 1940	590			
VBS 2080	635			
VBS 2240	680			

178 48 58-9.0

Fig. 5.18.04: Propeller clearance

Servo oil system for VBS type CP propeller

The design principle of the servo oil system for MAN Diesel's Alpha VBS type CP propeller is shown in Fig. 5.18.05.

The VBS system consists of a servo oil tank unit, the Hydraulic Power Unit, and a coupling flange with electrical pitch feedback box and oil distributor ring.

The electrical pitch feedback box continuously measures the position of the pitch feedback ring and compares this signal with the pitch order signal.

If deviation occurs, a proportional valve is actuated. Hereby high pressure oil is fed to one or the other side of the servo piston, via the oil distributor ring, until the desired propeller pitch has been reached.

The pitch setting is normally remote controlled, but local emergency control is possible.

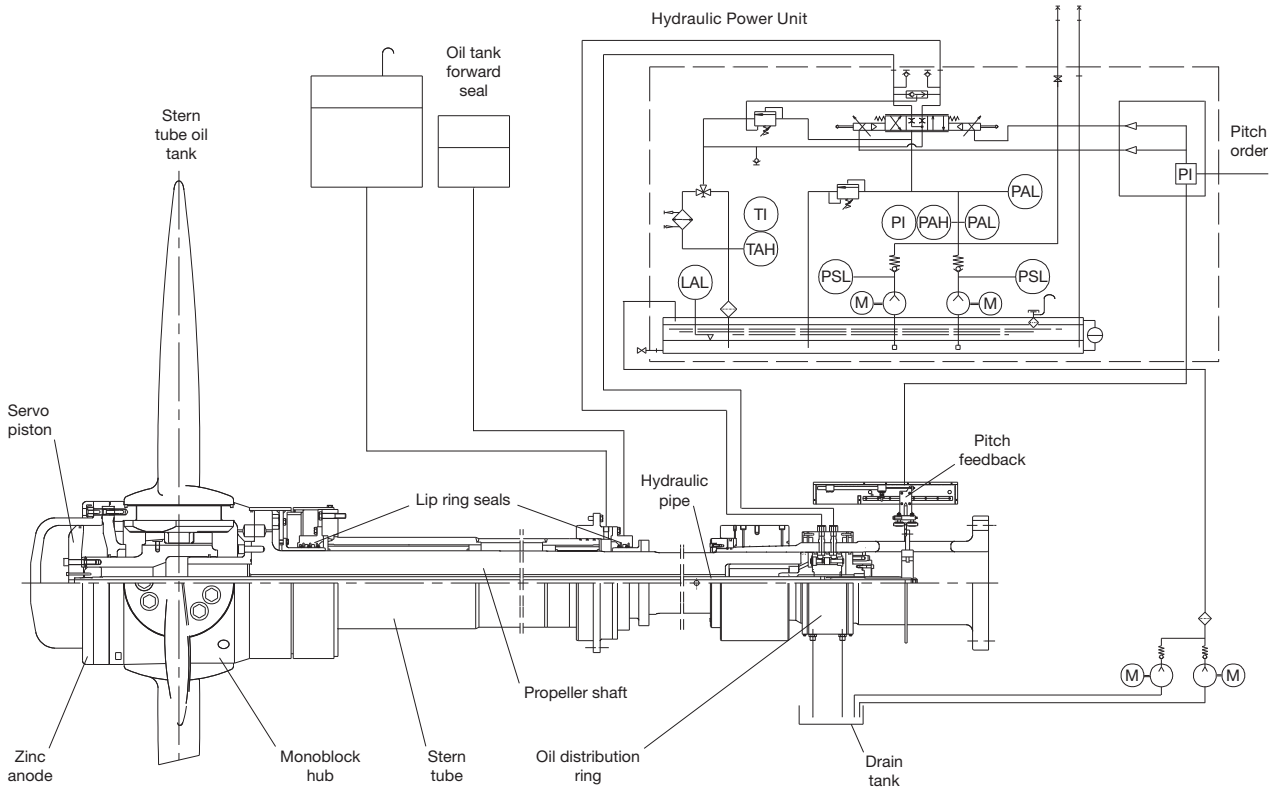

Fig. 5.18.05: Servo oil system for MAN Diesel's Alpha VBS type CP propeller

Hydraulic Power Unit for Alpha CP propeller

The servo oil tank unit, the Hydraulic Power Unit for MAN Diesel's Alpha CP propeller shown in Fig. 5.18.06, consists of an oil tank with all other components top mounted to facilitate installation at yard.

Two electrically driven pumps draw oil from the oil tank through a suction filter and deliver high pressure oil to the proportional valve.

One of two pumps are in service during normal operation, while the second will start up at powerful manoeuvring.

A servo oil pressure adjusting valve ensures minimum servo oil pressure at any time hereby minimizing the electrical power consumption.

Maximum system pressure is set on the safety valve.

The return oil is led back to the tank via a thermostatic valve, cooler and paper filter.

The servo oil unit is equipped with alarms according to the Classification Society's requirements as well as necessary pressure and temperature indicators.

If the servo oil unit cannot be located with maximum oil level below the oil distribution ring, the system must incorporate an extra, small drain tank complete with pump, located at a suitable level, below the oil distributor ring drain lines.

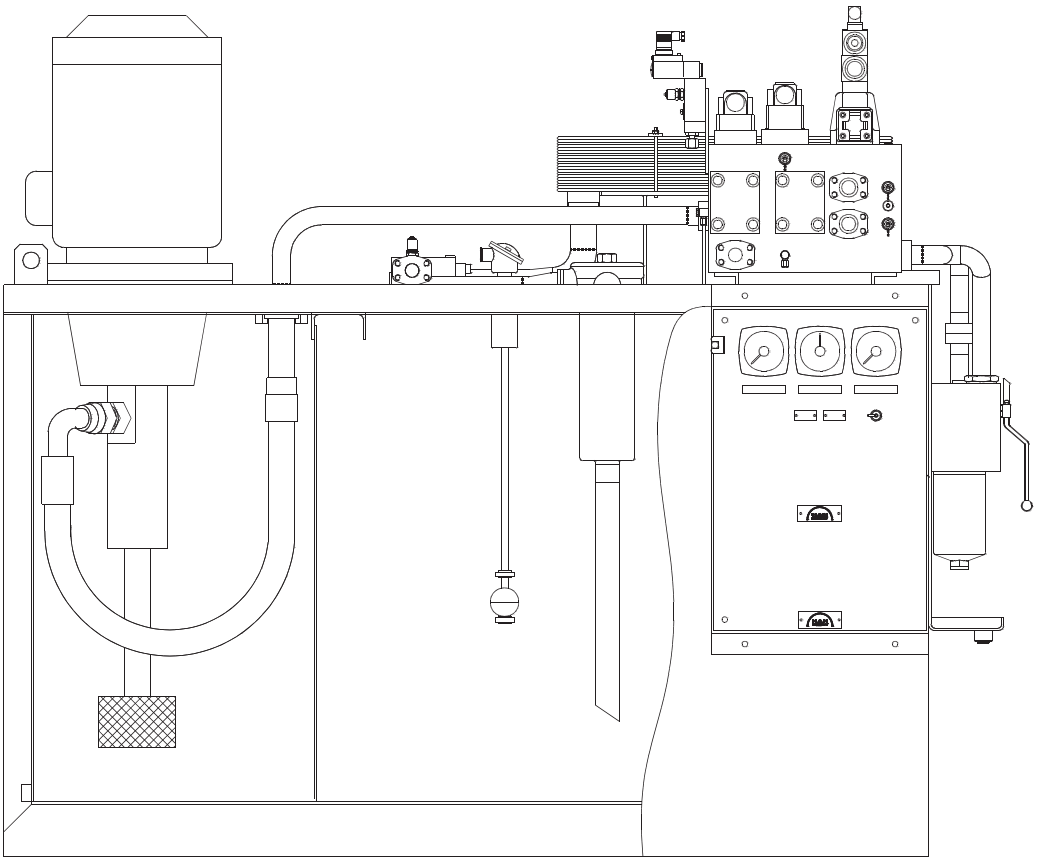

178 22 39-6.0

Fig. 5.18.06: Hydraulic Power Unit for MAN Diesel's Alpha CP propeller, the servo oil tank unit

Alphatronic 2000 Propulsion Control System

MAN Diesel's Alphatronic 2000 Propulsion Control System (PCS) is designed for control of propulsion plants based on diesel engines with CP propellers. The plant could for instance include tunnel gear with PTO/PTI, PTO gear, multiple engines on one gearbox as well as multiple propeller plants.

As shown in Fig. 5.18.07, the propulsion control system comprises a computer controlled system with interconnections between control stations via a redundant bus and a hard wired back-up control system for direct pitch control at constant shaft speed.

The computer controlled system contains functions for:

- Machinery control of engine start/stop, engine load limits and possible gear clutches.
- Thrust control with optimization of propeller pitch and shaft speed. Selection of combinator, constant speed or separate thrust mode is possible. The rates of changes are controlled to ensure smooth manoeuvres and avoidance of propeller cavitation.
- A **Load control** function protects the engine against overload. The load control function contains a scavenge air smoke limiter, a load programme for avoidance of high thermal stresses in the engine, an automatic load reduction and an engineer controlled limitation of maximum load.
- Functions for **transfer of responsibility** between the local control stand, engine control room and control locations on the bridge are incorporated in the system.

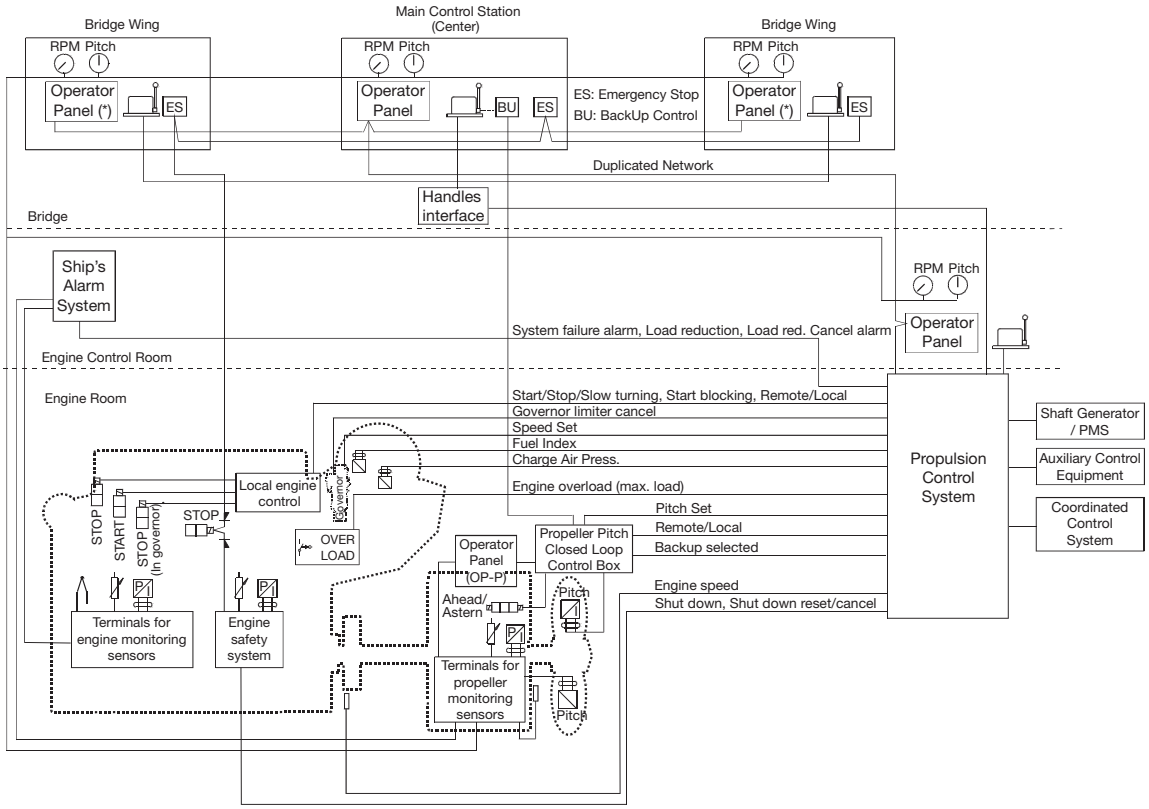

178 22 40-6.1

Fig. 5.18.07: MAN Diesel's Alphatronic 2000 Propulsion Control System

Propulsion control station on the main bridge

For remote control, a minimum of one control station located on the bridge is required.

This control station will incorporate three modules, as shown in Fig. 5.18.08:

- **Propulsion control panel** with push buttons and indicators for machinery control and a display with information of condition of operation and status of system parameters.
- **Propeller monitoring panel** with back-up instruments for propeller pitch and shaft speed.
- **Thrust control panel** with control lever for thrust control, an emergency stop button and push buttons for transfer of control between control stations on the bridge.

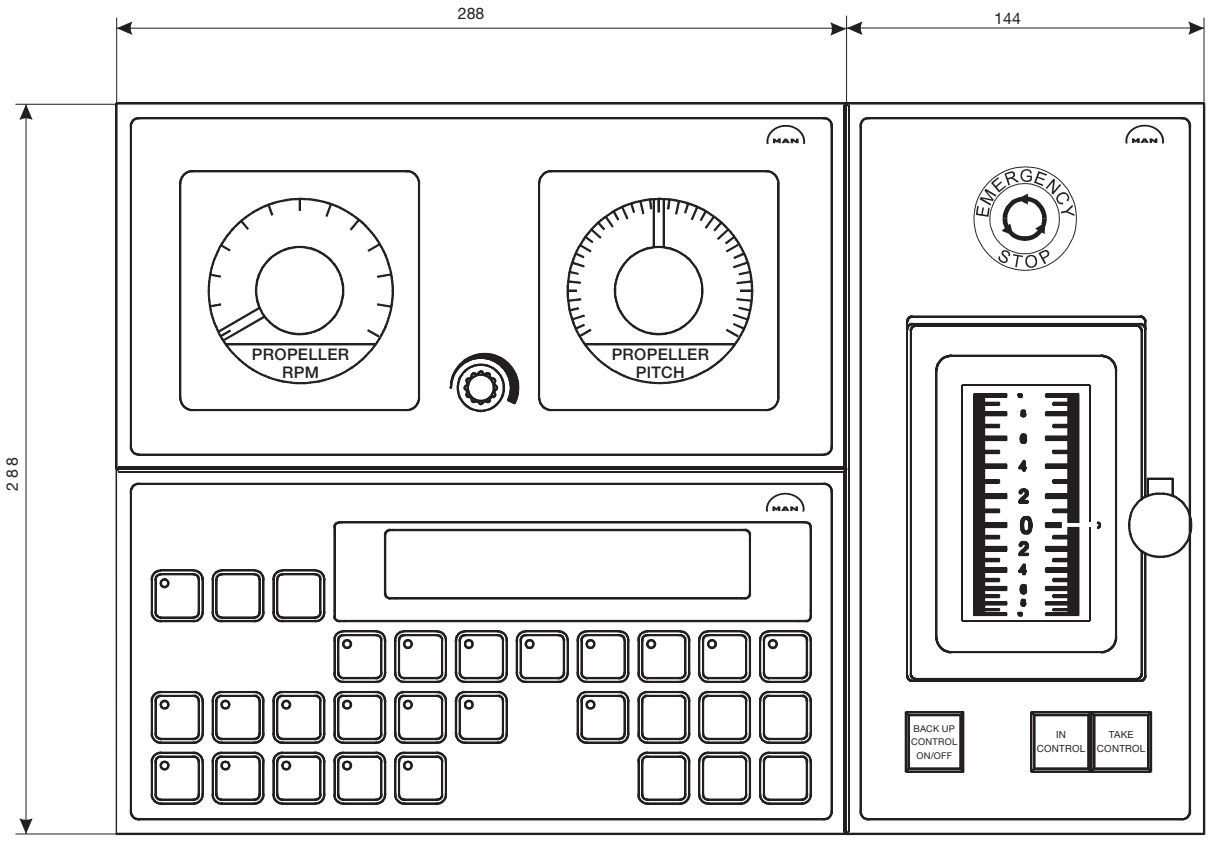

178 22 41-8.1

Fig. 5.18.08: Main bridge station standard layout

Renk KAZ Clutch for auxilliary propulsion systems

The Renk KAZ Clutch is a shaftline de-clutching device for auxilliary propulsion systems which meets the class notations for redundant propulsion.

The Renk KAZ clutch facilitates reliable and simple 'take home' and 'take away' functions in two-stroke engine plants. It is described in Section 4.04.

Further information about Alpha CP propeller

For further information about MAN Diesel's Alpha Controllable Pitch (CP) propeller and the Alphatronic 2000 Remote Control System, please refer to our publications:

CP Propeller – Product Information

Alphatronic 2000 PCS Propulsion Control System

The publications are available at www.mandieselturbo.com under 'Products' → 'Marine Engines & Systems' → 'Low Speed' → 'Technical Papers'.

List of Capacities: Pumps, Coolers & Exhaust Gas

6

Calculation of List of Capacities and Exhaust Gas Data

Updated engine and capacities data is available from the CEAS program on www.mandiesel-turbo.com under 'Products' → 'Marine Engines & Systems' → 'Low Speed' → 'CEAS - Engine Room Dimensioning'.

This chapter describes the necessary auxiliary machinery capacities to be used for a nominally rated engine. The capacities given are valid for seawater cooling system and central cooling water system, respectively. For derated engine, i.e. with a specified MCR and/or matching point different from the nominally rated MCR point, the list of capacities will be different from the nominal capacities.

Furthermore, among others, the exhaust gas data depends on the ambient temperature conditions.

Based on examples for a derated engine, the way of how to calculate the derated capacities, freshwater production and exhaust gas amounts and temperatures will be described in details.

Nomenclature

In the following description and examples of the auxiliary machinery capacities, freshwater generator production and exhaust gas data, the below nomenclatures are used:

Engine ratings	Point / Index	Power	Speed
Nominal MCR point	L_1	P_{L1}	n_{L1}
Specified MCR point	M	P_M	n_M
Matching point	O	P_O	n_O
Service point	S	P_S	n_S

Fig. 6.01.01: Nomenclature of basic engine ratings

Parameters			Cooler index		Flow index	
Q	=	Heat dissipation	air	scavenge air cooler	sw	seawater flow
V	=	Volume flow	lub	lube oil cooler	cw	cooling/central water flow
M	=	Mass flow	jw	jacket water cooler	exh	exhaust gas
T	=	Temperature	cent	central cooler	fw	freshwater

Fig. 6.01.02: Nomenclature of coolers and volume flows, etc.

Engine configurations related to SFOC

The engine type is available in the following version only with respect to the efficiency of the turbocharger:

With high efficiency turbocharger, which is the basic design and for which the lists of capacities Section 6.03 are calculated.

List of Capacities and Cooling Water Systems

The List of Capacities contain data regarding the necessary capacities of the auxiliary machinery for the main engine only, and refer to a nominally rated engine. Complying with IMO Tier II NO_x limitations.

The heat dissipation figures include 10% extra margin for overload running except for the scavenge air cooler, which is an integrated part of the diesel engine.

Cooling Water Systems

The capacities given in the tables are based on tropical ambient reference conditions and refer to engines with high efficiency/conventional turbocharger running at nominal MCR (L_1) for:

- **Seawater cooling system,**
  See diagram, Fig. 6.02.01 and nominal capacities in Fig. 6.03.01
- **Central cooling water system,**
  See diagram, Fig. 6.02.02 and nominal capacities in Fig. 6.03.01

The capacities for the starting air receivers and the compressors are stated in Fig. 6.03.01.

Heat radiation and air consumption

The radiation and convection heat losses to the engine room is around 1% of the engine nominal power (kW in L_1).

The air consumption is approximately 98.2% of the calculated exhaust gas amount, ie.
$M_{air} = M_{exh} \times 0.982$.

Flanges on engine, etc.

The location of the flanges on the engine are shown in: 'Engine pipe connections', and the flanges are identified by reference letters stated in the 'List of flanges'; both can be found in Chapter 5.

The diagrams use the 'Basic symbols for piping', whereas the symbols for instrumentation according to 'ISO 1219-1' and 'ISO 1219-2' and the instrumentation list found in Appendix A.

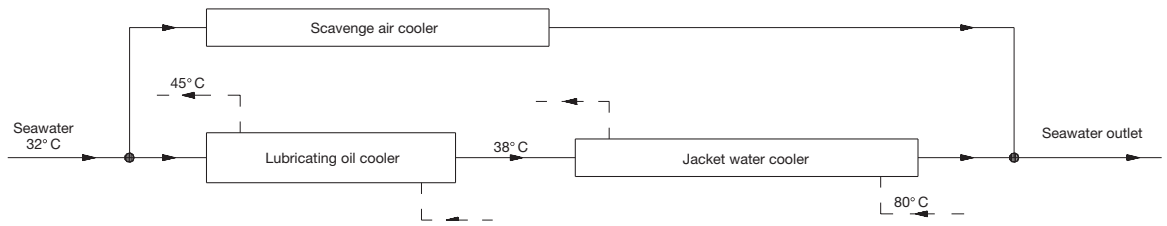

Fig. 6.02.01: Diagram for seawater cooling system

178 11 26-4.1

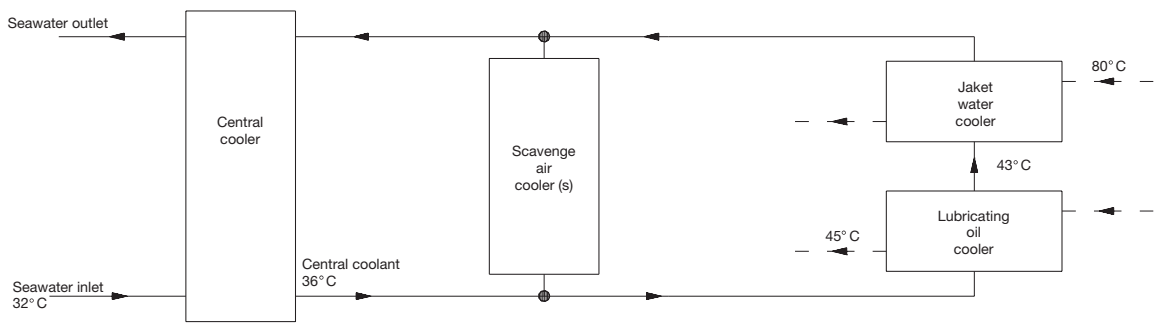

Fig. 6.02.02: Diagram for central cooling water system

178 11 27-6.1

List of Capacities

Please note that the information is to be found in the Project Guide for the relevant engine type.

Enclosed is an example of S70ME-C8-GI-TII.

See www.mandieselturbo.com under 'Products' → 'Marine Engines & Systems' → 'Low Speed' → 'CEAS - Engine Room Dimensioning' → to calculate list of capacities, enter engine specifications.

List of Capacities for 5S70ME-GI8-TII at NMCR - IMO NO_x Tier II compliance

		Seawater cooling						Central cooling					
		Conventional TC			High eff. TC			Conventional TC			High eff. TC		
		-	-	-	1 x TCA77-21	1 x A185-L34	1 x MET83MA	-	-	-	1 x TCA77-21	1 x A185-L34	1 x MET83MA
Pumps													
Fuel oil circulation	m³/h	N.A.	N.A.	N.A.	6.5	6.5	6.5	N.A.	N.A.	N.A.	6.5	6.5	6.5
Fuel oil supply	m³/h	N.A.	N.A.	N.A.	4.1	4.1	4.1	N.A.	N.A.	N.A.	4.1	4.1	4.1
Jacket cooling	m³/h	N.A.	N.A.	N.A.	135.0	135.0	135.0	N.A.	N.A.	N.A.	135.0	135.0	135.0
Seawater cooling *	m³/h	N.A.	N.A.	N.A.	530.0	530.0	540.0	N.A.	N.A.	N.A.	510.0	520.0	520.0
Main lubrication oil *	m³/h	N.A.	N.A.	N.A.	325.0	325.0	330.0	N.A.	N.A.	N.A.	325.0	325.0	330.0
Central cooling *	m³/h	-	-	-	-	-	-	-	-	-	410	410	410
Scavenge air cooler(s)													
Heat diss. app.	kW	N.A.	N.A.	N.A.	6,820	6,820	6,820	N.A.	N.A.	N.A.	6,790	6,790	6,790
Central water flow	m³/h	N.A.	N.A.	N.A.	-	-	-	N.A.	N.A.	N.A.	235	235	235
Seawater flow	m³/h	N.A.	N.A.	N.A.	353	353	353	N.A.	N.A.	N.A.	-	-	-
Lubricating oil cooler													
Heat diss. app. *	kW	N.A.	N.A.	N.A.	1,280	1,310	1,320	N.A.	N.A.	N.A.	1,280	1,310	1,320
Lube oil flow *	m³/h	N.A.	N.A.	N.A.	325.0	325.0	330.0	N.A.	N.A.	N.A.	325.0	325.0	330.0
Central water flow	m³/h	N.A.	N.A.	N.A.	-	-	-	N.A.	N.A.	N.A.	175	175	175
Seawater flow	m³/h	N.A.	N.A.	N.A.	177	177	187	N.A.	N.A.	N.A.	-	-	-
Jacket water cooler													
Heat diss. app.	kW	N.A.	N.A.	N.A.	2,370	2,370	2,370	N.A.	N.A.	N.A.	2,370	2,370	2,370
Jacket water flow	m³/h	N.A.	N.A.	N.A.	135	135	135	N.A.	N.A.	N.A.	135	135	135
Central water flow	m³/h	N.A.	N.A.	N.A.	-	-	-	N.A.	N.A.	N.A.	175	175	175
Seawater flow	m³/h	N.A.	N.A.	N.A.	177	177	187	N.A.	N.A.	N.A.	-	-	-
Central cooler													
Heat diss. app. *	kW	N.A.	N.A.	N.A.	-	-	-	N.A.	N.A.	N.A.	10,440	10,470	10,480
Central water flow	m³/h	N.A.	N.A.	N.A.	-	-	-	N.A.	N.A.	N.A.	410	410	410
Seawater flow	m³/h	N.A.	N.A.	N.A.	-	-	-	N.A.	N.A.	N.A.	510	520	520
Starting air system, 30.0 bar g, 12 starts. Fixed pitch propeller - reversible engine													
Receiver volume	m³	N.A.	N.A.	N.A.	2 x 7.5	2 x 7.5	2 x 7.5	N.A.	N.A.	N.A.	2 x 7.5	2 x 7.5	2 x 7.5
Compressor cap.	m³	N.A.	N.A.	N.A.	450	450	450	N.A.	N.A.	N.A.	450	450	450
Starting air system, 30.0 bar g, 6 starts. Controllable pitch propeller - non-reversible engine													
Receiver volume	m³	N.A.	N.A.	N.A.	2 x 4.0	2 x 4.0	2 x 4.0	N.A.	N.A.	N.A.	2 x 4.0	2 x 4.0	2 x 4.0
Compressor cap.	m³	N.A.	N.A.	N.A.	240	240	240	N.A.	N.A.	N.A.	240	240	240
Other values													
Fuel oil heater	kW	N.A.	N.A.	N.A.	170	170	170	N.A.	N.A.	N.A.	170	170	170
Exh. gas temp.	°C	N.A.	N.A.	N.A.	240	240	240	N.A.	N.A.	N.A.	240	240	240
Exh. gas amount	kg/h	N.A.	N.A.	N.A.	146,500	146,500	146,500	N.A.	N.A.	N.A.	146,500	146,500	146,500
Air consumption	kg/h	N.A.	N.A.	N.A.	39.9	39.9	39.9	N.A.	N.A.	N.A.	39.9	39.9	39.9

* For main engine arrangements with built-on power take-off (PTO) of a MAN Diesel recommended type and/or torsional vibration damper the engine's capacities must be increased by those stated for the actual system

For List of Capacities for derated engines and performance data at part load please visit http://www.manbw.dk/ceas/erd/

Table 6.03.01e: Capacities for seawater and central systems as well as conventional and high efficiency turbochargers stated at NMCR

List of Capacities for 6S70ME-GI8-TII at NMCR - IMO NO_x Tier II compliance

		Seawater cooling						Central cooling					
		Conventional TC			High eff. TC			Conventional TC			High eff. TC		
		-	-	-	1 x TCA88-21	1 x A190-L34	1 x MET83MA	-	-	-	1 x TCA88-21	1 x A190-L34	1 x MET83MA
Pumps													
Fuel oil circulation	m³/h	N.A.	N.A.	N.A.	7.8	7.8	7.8	N.A.	N.A.	N.A.	7.8	7.8	7.8
Fuel oil supply	m³/h	N.A.	N.A.	N.A.	4.9	4.9	4.9	N.A.	N.A.	N.A.	4.9	4.9	4.9
Jacket cooling	m³/h	N.A.	N.A.	N.A.	165.0	165.0	165.0	N.A.	N.A.	N.A.	165.0	165.0	165.0
Seawater cooling *	m³/h	N.A.	N.A.	N.A.	640.0	640.0	640.0	N.A.	N.A.	N.A.	620.0	620.0	620.0
Main lubrication oil *	m³/h	N.A.	N.A.	N.A.	390.0	385.0	390.0	N.A.	N.A.	N.A.	390.0	385.0	390.0
Central cooling *	m³/h	-	-	-	-	-	-	-	-	-	495	495	495
Scavenge air cooler(s)													
Heat diss. app.	kW	N.A.	N.A.	N.A.	8,190	8,190	8,190	N.A.	N.A.	N.A.	8,150	8,150	8,150
Central water flow	m³/h	N.A.	N.A.	N.A.	-	-	-	N.A.	N.A.	N.A.	283	283	283
Seawater flow	m³/h	N.A.	N.A.	N.A.	424	424	424	N.A.	N.A.	N.A.	-	-	-
Lubricating oil cooler													
Heat diss. app. *	kW	N.A.	N.A.	N.A.	1,530	1,560	1,550	N.A.	N.A.	N.A.	1,530	1,560	1,550
Lube oil flow *	m³/h	N.A.	N.A.	N.A.	390.0	385.0	390.0	N.A.	N.A.	N.A.	390.0	385.0	390.0
Central water flow	m³/h	N.A.	N.A.	N.A.	-	-	-	N.A.	N.A.	N.A.	212	212	212
Seawater flow	m³/h	N.A.	N.A.	N.A.	216	216	216	N.A.	N.A.	N.A.	-	-	-
Jacket water cooler													
Heat diss. app.	kW	N.A.	N.A.	N.A.	2,840	2,840	2,840	N.A.	N.A.	N.A.	2,840	2,840	2,840
Jacket water flow	m³/h	N.A.	N.A.	N.A.	165	165	165	N.A.	N.A.	N.A.	165	165	165
Central water flow	m³/h	N.A.	N.A.	N.A.	-	-	-	N.A.	N.A.	N.A.	212	212	212
Seawater flow	m³/h	N.A.	N.A.	N.A.	216	216	216	N.A.	N.A.	N.A.	-	-	-
Central cooler													
Heat diss. app. *	kW	N.A.	N.A.	N.A.	-	-	-	N.A.	N.A.	N.A.	12,520	12,550	12,540
Central water flow	m³/h	N.A.	N.A.	N.A.	-	-	-	N.A.	N.A.	N.A.	495	495	495
Seawater flow	m³/h	N.A.	N.A.	N.A.	-	-	-	N.A.	N.A.	N.A.	620	620	620
Starting air system, 30.0 bar g, 12 starts. Fixed pitch propeller - reversible engine													
Receiver volume	m³	N.A.	N.A.	N.A.	2 x 8.0	2 x 8.0	2 x 8.0	N.A.	N.A.	N.A.	2 x 8.0	2 x 8.0	2 x 8.0
Compressor cap.	m³	N.A.	N.A.	N.A.	480	480	480	N.A.	N.A.	N.A.	480	480	480
Starting air system, 30.0 bar g, 6 starts. Controllable pitch propeller - non-reversible engine													
Receiver volume	m³	N.A.	N.A.	N.A.	2 x 4.5	2 x 4.5	2 x 4.5	N.A.	N.A.	N.A.	2 x 4.5	2 x 4.5	2 x 4.5
Compressor cap.	m³	N.A.	N.A.	N.A.	270	270	270	N.A.	N.A.	N.A.	270	270	270
Other values													
Fuel oil heater	kW	N.A.	N.A.	N.A.	205	205	205	N.A.	N.A.	N.A.	205	205	205
Exh. gas temp.	°C	N.A.	N.A.	N.A.	240	240	240	N.A.	N.A.	N.A.	240	240	240
Exh. gas amount	kg/h	N.A.	N.A.	N.A.	175,800	175,800	175,800	N.A.	N.A.	N.A.	175,800	175,800	175,800
Air consumption	kg/h	N.A.	N.A.	N.A.	47.9	47.9	47.9	N.A.	N.A.	N.A.	47.9	47.9	47.9

* For main engine arrangements with built-on power take-off (PTO) of a MAN Diesel recommended type and/or torsional vibration damper the engine's capacities must be increased by those stated for the actual system

For List of Capacities for derated engines and performance data at part load please visit http://www.manbw.dk/ceas/erd/

Table 6.03.01f: Capacities for seawater and central systems as well as conventional and high efficiency turbochargers stated at NMCR

List of Capacities for 7S70ME-GI8-TII at NMCR - IMO NO_x Tier II compliance

		Seawater cooling						Central cooling					
		Conventional TC			High eff. TC			Conventional TC			High eff. TC		
		-	-	-	1 x TCA88-21	1 x TPL91-B12	2 x MET66MA	-	-	-	1 x TCA88-21	1 x TPL91-B12	2 x MET66MA
Pumps													
Fuel oil circulation	m³/h	N.A.	N.A.	N.A.	9.1	9.1	9.1	N.A.	N.A.	N.A.	9.1	9.1	9.1
Fuel oil supply	m³/h	N.A.	N.A.	N.A.	5.7	5.7	5.7	N.A.	N.A.	N.A.	5.7	5.7	5.7
Jacket cooling	m³/h	N.A.	N.A.	N.A.	190.0	190.0	190.0	N.A.	N.A.	N.A.	190.0	190.0	190.0
Seawater cooling *	m³/h	N.A.	N.A.	N.A.	750.0	750.0	750.0	N.A.	N.A.	N.A.	720.0	720.0	720.0
Main lubrication oil *	m³/h	N.A.	N.A.	N.A.	455.0	455.0	460.0	N.A.	N.A.	N.A.	455.0	455.0	460.0
Central cooling *	m³/h	-	-	-	-	-	-	-	-	-	570	580	580
Scavenge air cooler(s)													
Heat diss. app.	kW	N.A.	N.A.	N.A.	9,560	9,560	9,560	N.A.	N.A.	N.A.	9,510	9,510	9,510
Central water flow	m³/h	N.A.	N.A.	N.A.	-	-	-	N.A.	N.A.	N.A.	330	330	330
Seawater flow	m³/h	N.A.	N.A.	N.A.	494	494	494	N.A.	N.A.	N.A.	-	-	-
Lubricating oil cooler													
Heat diss. app. *	kW	N.A.	N.A.	N.A.	1,770	1,840	1,820	N.A.	N.A.	N.A.	1,770	1,840	1,820
Lube oil flow *	m³/h	N.A.	N.A.	N.A.	455.0	455.0	460.0	N.A.	N.A.	N.A.	455.0	455.0	460.0
Central water flow	m³/h	N.A.	N.A.	N.A.	-	-	-	N.A.	N.A.	N.A.	240	250	250
Seawater flow	m³/h	N.A.	N.A.	N.A.	256	256	256	N.A.	N.A.	N.A.	-	-	-
Jacket water cooler													
Heat diss. app.	kW	N.A.	N.A.	N.A.	3,310	3,310	3,310	N.A.	N.A.	N.A.	3,310	3,310	3,310
Jacket water flow	m³/h	N.A.	N.A.	N.A.	190	190	190	N.A.	N.A.	N.A.	190	190	190
Central water flow	m³/h	N.A.	N.A.	N.A.	-	-	-	N.A.	N.A.	N.A.	240	250	250
Seawater flow	m³/h	N.A.	N.A.	N.A.	256	256	256	N.A.	N.A.	N.A.	-	-	-
Central cooler													
Heat diss. app. *	kW	N.A.	N.A.	N.A.	-	-	-	N.A.	N.A.	N.A.	14,590	14,660	14,640
Central water flow	m³/h	N.A.	N.A.	N.A.	-	-	-	N.A.	N.A.	N.A.	570	580	580
Seawater flow	m³/h	N.A.	N.A.	N.A.	-	-	-	N.A.	N.A.	N.A.	720	720	720
Starting air system, 30.0 bar g, 12 starts. Fixed pitch propeller - reversible engine													
Receiver volume	m³	N.A.	N.A.	N.A.	2 x 8.0	2 x 8.0	2 x 8.0	N.A.	N.A.	N.A.	2 x 8.0	2 x 8.0	2 x 8.0
Compressor cap.	m³	N.A.	N.A.	N.A.	480	480	480	N.A.	N.A.	N.A.	480	480	480
Starting air system, 30.0 bar g, 6 starts. Controllable pitch propeller - non-reversible engine													
Receiver volume	m³	N.A.	N.A.	N.A.	2 x 4.5	2 x 4.5	2 x 4.5	N.A.	N.A.	N.A.	2 x 4.5	2 x 4.5	2 x 4.5
Compressor cap.	m³	N.A.	N.A.	N.A.	270	270	270	N.A.	N.A.	N.A.	270	270	270
Other values													
Fuel oil heater	kW	N.A.	N.A.	N.A.	240	240	240	N.A.	N.A.	N.A.	240	240	240
Exh. gas temp.	°C	N.A.	N.A.	N.A.	240	240	240	N.A.	N.A.	N.A.	240	240	240
Exh. gas amount	kg/h	N.A.	N.A.	N.A.	205,100	205,100	205,100	N.A.	N.A.	N.A.	205,100	205,100	205,100
Air consumption	kg/h	N.A.	N.A.	N.A.	55.9	55.9	55.9	N.A.	N.A.	N.A.	55.9	55.9	55.9

* For main engine arrangements with built-on power take-off (PTO) of a MAN Diesel recommended type and/or torsional vibration damper the engine's capacities must be increased by those stated for the actual system

For List of Capacities for derated engines and performance data at part load please visit http://www.manbw.dk/ceas/erd/

Table 6.03.01g: Capacities for seawater and central systems as well as conventional and high efficiency turbochargers stated at NMCR

List of Capacities for 8S70ME-GI8-TII at NMCR - IMO NO_x Tier II compliance

		Seawater cooling						Central cooling					
		Conventional TC			High eff. TC			Conventional TC			High eff. TC		
		-	-	-	1 x TCA88-25	1 x TPL91-B12	2 x MET66MA	-	-	-	1 x TCA88-25	1 x TPL91-B12	2 x MET66MA
Pumps													
Fuel oil circulation	m³/h	N.A.	N.A.	N.A.	10.4	10.4	10.4	N.A.	N.A.	N.A.	10.4	10.4	10.4
Fuel oil supply	m³/h	N.A.	N.A.	N.A.	6.5	6.5	6.5	N.A.	N.A.	N.A.	6.5	6.5	6.5
Jacket cooling	m³/h	N.A.	N.A.	N.A.	215.0	215.0	215.0	N.A.	N.A.	N.A.	215.0	215.0	215.0
Seawater cooling *	m³/h	N.A.	N.A.	N.A.	850.0	850.0	850.0	N.A.	N.A.	N.A.	820.0	820.0	820.0
Main lubrication oil *	m³/h	N.A.	N.A.	N.A.	520.0	520.0	520.0	N.A.	N.A.	N.A.	520.0	520.0	520.0
Central cooling *	m³/h	-	-	-	-	-	-	-	-	-	650	660	660
Scavenge air cooler(s)													
Heat diss. app.	kW	N.A.	N.A.	N.A.	10,920	10,920	10,920	N.A.	N.A.	N.A.	10,860	10,860	10,860
Central water flow	m³/h	N.A.	N.A.	N.A.	-	-	-	N.A.	N.A.	N.A.	377	377	377
Seawater flow	m³/h	N.A.	N.A.	N.A.	565	565	565	N.A.	N.A.	N.A.	-	-	-
Lubricating oil cooler													
Heat diss. app. *	kW	N.A.	N.A.	N.A.	2,000	2,080	2,050	N.A.	N.A.	N.A.	2,000	2,080	2,050
Lube oil flow *	m³/h	N.A.	N.A.	N.A.	520.0	520.0	520.0	N.A.	N.A.	N.A.	520.0	520.0	520.0
Central water flow	m³/h	N.A.	N.A.	N.A.	-	-	-	N.A.	N.A.	N.A.	273	283	283
Seawater flow	m³/h	N.A.	N.A.	N.A.	285	285	285	N.A.	N.A.	N.A.	-	-	-
Jacket water cooler													
Heat diss. app.	kW	N.A.	N.A.	N.A.	3,780	3,780	3,780	N.A.	N.A.	N.A.	3,780	3,780	3,780
Jacket water flow	m³/h	N.A.	N.A.	N.A.	215	215	215	N.A.	N.A.	N.A.	215	215	215
Central water flow	m³/h	N.A.	N.A.	N.A.	-	-	-	N.A.	N.A.	N.A.	273	283	283
Seawater flow	m³/h	N.A.	N.A.	N.A.	285	285	285	N.A.	N.A.	N.A.	-	-	-
Central cooler													
Heat diss. app. *	kW	N.A.	N.A.	N.A.	-	-	-	N.A.	N.A.	N.A.	16,640	16,720	16,690
Central water flow	m³/h	N.A.	N.A.	N.A.	-	-	-	N.A.	N.A.	N.A.	650	660	660
Seawater flow	m³/h	N.A.	N.A.	N.A.	-	-	-	N.A.	N.A.	N.A.	820	820	820
Starting air system, 30.0 bar g, 12 starts. Fixed pitch propeller - reversible engine													
Receiver volume	m³	N.A.	N.A.	N.A.	2 x 8.5	2 x 8.5	2 x 8.5	N.A.	N.A.	N.A.	2 x 8.5	2 x 8.5	2 x 8.5
Compressor cap.	m³	N.A.	N.A.	N.A.	510	510	510	N.A.	N.A.	N.A.	510	510	510
Starting air system, 30.0 bar g, 6 starts. Controllable pitch propeller - non-reversible engine													
Receiver volume	m³	N.A.	N.A.	N.A.	2 x 4.5	2 x 4.5	2 x 4.5	N.A.	N.A.	N.A.	2 x 4.5	2 x 4.5	2 x 4.5
Compressor cap.	m³	N.A.	N.A.	N.A.	270	270	270	N.A.	N.A.	N.A.	270	270	270
Other values													
Fuel oil heater	kW	N.A.	N.A.	N.A.	275	275	275	N.A.	N.A.	N.A.	275	275	275
Exh. gas temp.	°C	N.A.	N.A.	N.A.	240	240	240	N.A.	N.A.	N.A.	240	240	240
Exh. gas amount	kg/h	N.A.	N.A.	N.A.	234,400	234,400	234,400	N.A.	N.A.	N.A.	234,400	234,400	234,400
Air consumption	kg/h	N.A.	N.A.	N.A.	63.9	63.9	63.9	N.A.	N.A.	N.A.	63.9	63.9	63.9

* For main engine arrangements with built-on power take-off (PTO) of a MAN Diesel recommended type and/or torsional vibration damper the engine's capacities must be increased by those stated for the actual system

For List of Capacities for derated engines and performance data at part load please visit http://www.manbw.dk/ceas/erd/

Table 6.03.01h: Capacities for seawater and central systems as well as conventional and high efficiency turbochargers stated at NMCR

Auxiliary Machinery Capacities

The dimensioning of heat exchangers (coolers) and pumps for derated engines can be calculated on the basis of the heat dissipation values found by using the following description and diagrams. Those for the nominal MCR (L_1), may also be used if wanted.

The nomenclature of the basic engine ratings and coolers, etc. used in this section is shown in Fig. 6.01.01 and 6.01.02.

Cooler heat dissipations

For the specified MCR (M) the following three diagrams in Figs. 6.04.01, 6.04.02 and 6.04.03 show reduction factors for the corresponding heat dissipations for the coolers, relative to the values stated in the 'List of Capacities' valid for nominal MCR (L_1).

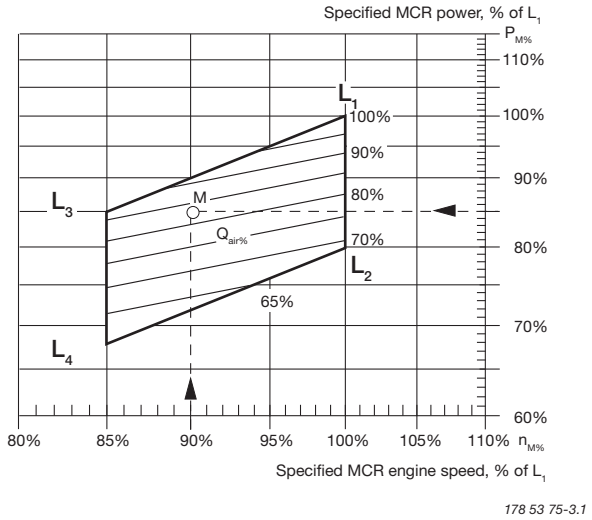

$$Q_{air\%} = 100 \times (P_M/P_{L1})^{1.68} \times (n_M/n_{L1})^{-0.83} \times k_O$$

$$k_O = 1 + 0.27 \times (1 - P_O/P_M) = 1$$

Fig. 6.04.01: Scavenge air cooler, heat dissipation $Q_{air\%}$ in point M, in % of the L_1 value $Q_{air,\,L1}$ and valid for $P_O = P_M$. As matching point O = M, correction $k_O = 1$

The percentage power ($P_{M\%}$) and speed ($n_{M\%}$) of L_1 ie: $P_{M\%} = P_M/P_{L1} \times 100\%$

$n_{M\%} = n_M/n_{L1} \times 100\%$

for specified MCR (M) of the derated engine is used as input in the above-mentioned diagrams, giving the % heat dissipation figures relative to those in the 'List of Capacities',

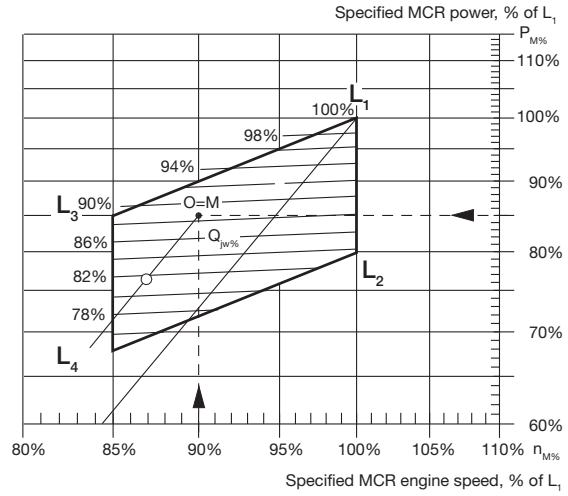

$$Q_{jw\%} = e^{(-0.0811 \times \ln(n_{M\%}) + 0.8072 \times \ln(P_{M\%}) + 1.2614)}$$

Fig. 6.04.02: Jacket water cooler, heat dissipation $Q_{jw\%}$ in point M, in % of the L_1 value $Q_{jw,\,L1}$

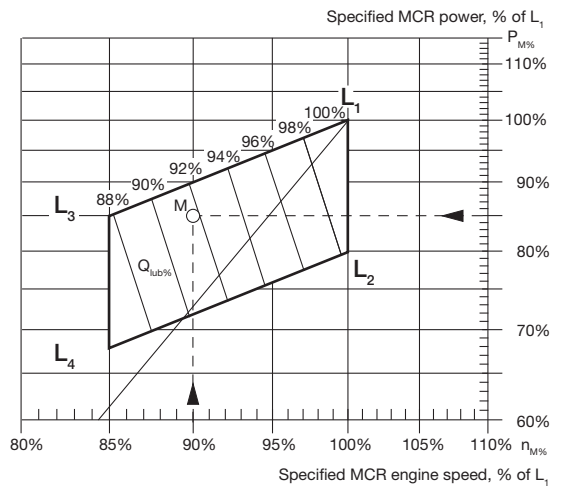

$$Q_{lub\%} = 67.3009 \times \ln(n_{M\%}) + 7.6304 \times \ln(P_{M\%}) - 245.0714$$

Fig. 6.04.03: Lubricating oil cooler, heat dissipation $Q_{lub\%}$ in point M, in % of the L_1 value $Q_{lub,\,L1}$

Pump pressures

Irrespective of the capacities selected as per the above guidelines, the below-mentioned pump heads at the mentioned maximum working temperatures for each system shall be kept:

	Pump head bar	Max. working temp °C
Fuel oil supply pump	4	100
Fuel oil circulating pump	6	150
Lubricating oil pump: S70ME-C8-GI, S65ME-C8-GI	4.5	70
S60ME-C8/-GI	4.3	70
Seawater pump	2.5	50
Central cooling water pump	2.5	80
Jacket water pump	3.0	100

Flow velocities

For external pipe connections, we prescribe the following maximum velocities:

Marine diesel oil ..... 1.0 m/s
Heavy fuel oil ..... 0.6 m/s
Lubricating oil ..... 1.8 m/s
Cooling water ..... 3.0 m/s

Calculation of List of Capacities for Derated Engine

Example 1:

Pump and cooler capacities for a *derated 6S70ME-C8-GI-TII with high efficiency MAN Diesel turbocharger type TCA, fixed pitch propeller and central cooling water system.*

Nominal MCR, (L_1) P_{L1}: 19,620 kW (100.0%) and 91.0 r/min (100.0%)

Specified MCR, (M) P_M: 16,677 kW (85.0%) and 81.9 r/min (90.0%)

Matching point, (O) P_O: 16,677 kW (85.0%) and 81.9 r/min (90.0%), P_O = 100.0% of P_M

The method of calculating the reduced capacities for point M ($n_{M\%}$ = 90.0% and $P_{M\%}$ = 85.0%) is shown below.

The values valid for the nominal rated engine are found in the 'List of Capacities', Figs. 6.03.01 and 6.03.02, and are listed together with the result in the figure on the next page.

Heat dissipation of scavenge air cooler
Fig. 6.04.01 which approximately indicates a $Q_{air\%}$ = 83.1% heat dissipation, i.e.:

$Q_{air,M} = Q_{air,L1} \times Q_{air\%} / 100$

$Q_{air,M}$ = 8,150 x 0.831 = 6,773 kW

Heat dissipation of jacket water cooler
Fig. 6.04.02 indicates a $Q_{jw\%}$ = 88.5% heat dissipation; i.e.:

$Q_{jw,M} = Q_{jw,L1} \times Q_{jw\%} / 100$

$Q_{jw,M}$ = 2,840 x 0.885 = 2,513 kW

Heat dissipation of lube oil cooler
Fig. 6.04.03 indicates a $Q_{lub\%}$ = 91.7% heat dissipation; i.e.:

$Q_{lub,M} = Q_{lub,L1} \times Q_{lub\%} / 100$

$Q_{lub,M}$ = 1,530 x 0.917 = 1,403 kW

Heat dissipation of central water cooler

$Q_{cent,M} = Q_{air,M} + Q_{jw,M} + Q_{lub,M}$

$Q_{cent,M}$ = 6,773 + 2,513 + 1,403 = 10,689 kW

Total cooling water flow through scavenge air coolers

$V_{cw,air,M} = V_{cw,air,L1} \times Q_{air\%} / 100$

$V_{cw,air,M}$ = 283 x 0.831 = 235 m^3/h

Cooling water flow through lubricating oil cooler

$V_{cw,lub,M} = V_{cw,lub,L1} \times Q_{lub\%} / 100$

$V_{cw,lub,M}$ = 212 x 0.917 = 194 m^3/h

Cooling water flow through central cooler (Central cooling water pump)

$V_{cw,cent,M} = V_{cw,air,M} + V_{cw,lub,M}$

$V_{cw,cent,M}$ = 235 + 194 = 429 m^3/h

Cooling water flow through jacket water cooler (as for lube oil cooler)

$V_{cw,jw,M} = V_{cw,lub,M}$

$V_{cw,jw,M}$ = 194 m^3/h

Seawater pump for central cooler
As the seawater pump capacity and the central cooler heat dissipation for the nominal rated engine found in the 'List of Capacities' are 620 m^3/h and 12,520 kW the derated seawater pump flow equals:

Seawater pump:

$V_{sw,cent,M} = V_{sw,cent,L1} \times Q_{cent,M} / Q_{cent,L1}$

= 620 x 10,689 / 12,520 = 529 m^3/h

		Nominal rated engine (L_1) High efficiency turbocharger (TCA)	Example 1 Specified MCR (M)
Shaft power at MCR		19,620 kW	16,677 kW
Engine speed at MCR		at 91.0 r/min	at 81.9 r/min
Power of matching point %MCR		100%	90%
Pumps:			
Fuel oil circulating pump	m^3/h	7.8	7.8
Fuel oil supply pump	m^3/h	4.9	4.9
Jacket cooling water pump	m^3/h	165	165
Central cooling water pump	m^3/h	495	429
Seawater pump	m^3/h	620	529
Lubricating oil pump	m^3/h	390	390
Coolers:			
Scavenge air cooler			
Heat dissipation	kW	8,150	6,773
Central water quantity	m^3/h	283	235
Lub. oil cooler			
Heat dissipation	kW	1,530	1,403
Lubricating oil quantity	m^3/h	390	390
Central water quantity	m^3/h	212	194
Jacket water cooler			
Heat dissipation	kW	2,840	2,513
Jacket cooling water quantity	m^3/h	165	165
Central water quantity	m^3/h	212	194
Central cooler			
Heat dissipation	kW	12,520	10,689
Central water quantity	m^3/h	495	429
Seawater quantity	m^3/h	620	529
Fuel oil heater:	kW	205	205
Gases at ISO ambient conditions*			
Exhaust gas amount	kg/h	175,800	149,800
Exhaust gas temperature	°C	240	232.8
Air consumption	kg/s	47.9	40.9
Starting air system: 30 bar (gauge)			
Reversible engine			
Receiver volume (12 starts)	m^3	2 x 8.0	2 x 8.0
Compressor capacity, total	m^3/h	480	480
Non-reversible engine			
Receiver volume (6 starts)	m^3	2 x 4.5	2 x 4.5
Compressor capacity, total	m^3/h	270	270
Exhaust gas tolerances: temperature ±15 °C and amount ±5%			

The air consumption and exhaust gas figures are expected and refer to 100% specified MCR, ISO ambient reference conditions and the exhaust gas back pressure 300 mm WC
The exhaust gas temperatures refer to after turbocharger
* Calculated in example 3, in this chapter

Example 1 – Capacities of derated 6S70ME-C8-GI-TII with high efficiency MAN Diesel turbocharger type TCA and central cooling water system.

Freshwater Generator

If a freshwater generator is installed and is utilising the heat in the jacket water cooling system, it should be noted that the actual available heat in the jacket cooling water system is **lower** than indicated by the heat dissipation figures valid for nominal MCR (L_1) given in the List of Capacities. This is because the latter figures are used for dimensioning the jacket water cooler and hence incorporate a safety margin which can be needed when the engine is operating under conditions such as, e.g. overload. Normally, this margin is 10% at nominal MCR.

Calculation Method

For a derated diesel engine, i.e. an engine having a specified MCR (M) equal to matching point (O) different from L_1, the relative jacket water heat dissipation for point M and O may be found, as previously described, by means of Fig. 6.04.02.

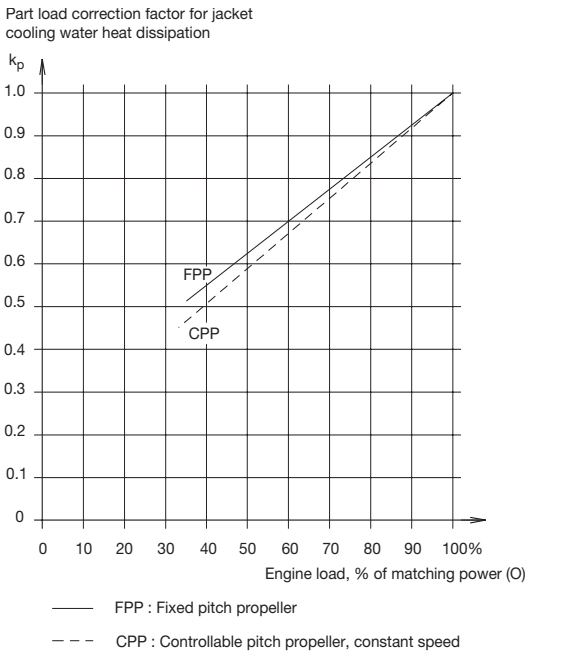

$$FPP : k_p = 0.742 \times \frac{P_S}{P_O} + 0.258$$

$$CPP : k_p = 0.822 \times \frac{P_S}{P_O} + 0.178$$

Fig. 6.04.04: Correction factor 'kp' for jacket cooling water heat dissipation at part load, relative to heat dissipation at matching power

At part load operation, lower than matching power, the actual jacket water heat dissipation will be reduced according to the curves for fixed pitch propeller (FPP) or for constant speed, controllable pitch propeller (CPP), respectively, in Fig. 6.04.04.

With reference to the above, the heat actually available for a derated diesel engine may then be found as follows:

1. Engine power equal to specified power M (equal to matching point O).

   For specified MCR (M) = matching power (O), the diagram Fig. 6.04.02 is to be used, i.e. giving the percentage correction factor '$Q_{jw\%}$' and hence for matching power P_O:

   $$Q_{jw,O} = Q_{jw,L1} \times \frac{Q_{jw\%}}{100} \times 0.9 \ (0.88) \qquad [1]$$

2. Engine power lower than matching power.

   For powers lower than the matching power, the value $Q_{jw,O}$ found for point O by means of the above equation [1] is to be multiplied by the correction factor k_p found in Fig. 6.04.04 and hence

   $$Q_{jw} = Q_{jw,O} \times k_p \ -15\%/0\% \qquad [2]$$

where
Q_{jw} = jacket water heat dissipation
$Q_{jw,L1}$ = jacket water heat dissipation at nominal MCR (L_1)
$Q_{jw\%}$ = percentage correction factor from Fig. 6.04.02
$Q_{jw,O}$ = jacket water heat dissipation at matching power (O), found by means of equation [1]
k_p = part load correction factor from Fig. 6.04.04
0.9 = factor for safety margin of cooler, tropical ambient conditions

The heat dissipation is assumed to be more or less independent of the ambient temperature conditions, yet the safety margin/ambient condition factor of about 0.88 instead of 0.90 will be more accurate for ambient conditions corresponding to ISO temperatures or lower. The heat dissipation tolerance from -15% to 0% stated above is based on experience.

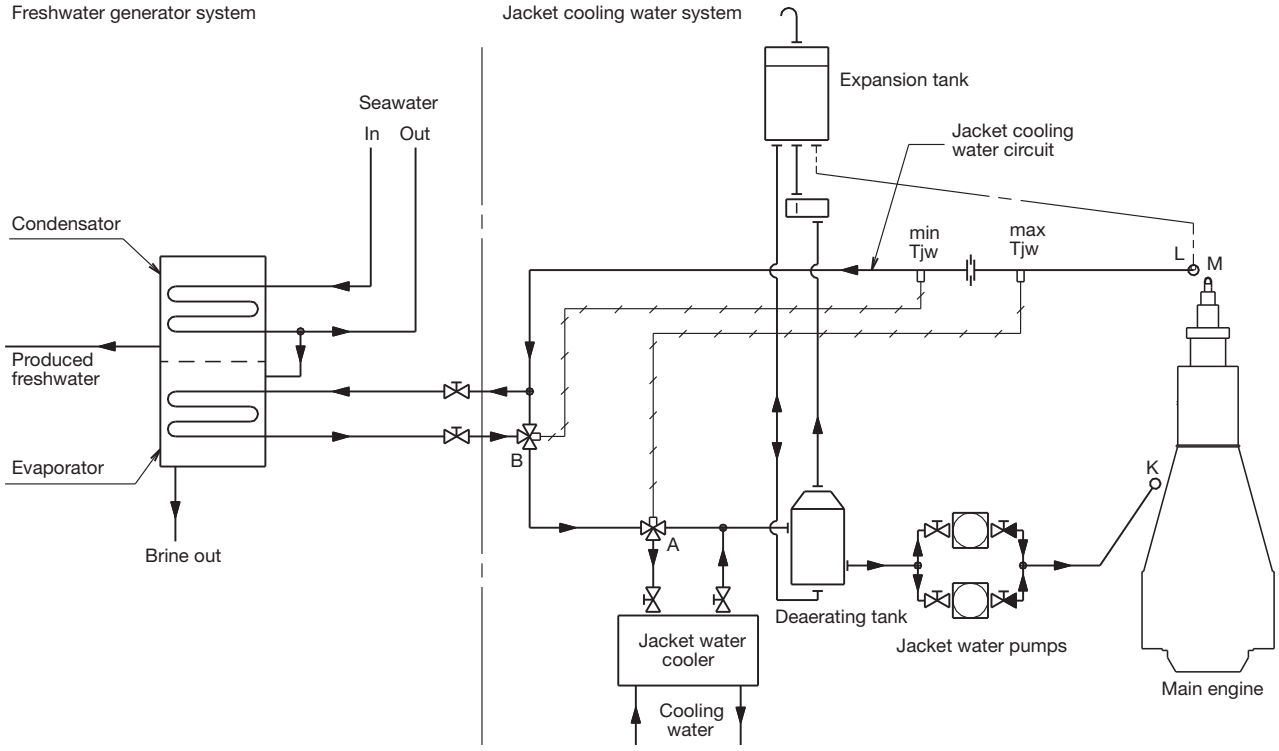

Valve A: ensures that T_{jw} < 85° C
Valve B: ensures that T_{jw} > 85 – 5° C = 80° C
Valve B and the corresponding by-pass may be omitted if, for example, the freshwater generator is equipped with an automatic start/stop function for too low jacket cooling water temperature
If necessary, all the actually available jacket cooling water heat may be utilised provided that a special temperature control system ensures that the jacket cooling water temperature at the outlet from the engine does not fall below a certain level

178 23 70-0.0

Fig. 6.04.05: Freshwater generators. Jacket cooling water heat recovery flow diagram

Jacket Cooling Water Temperature Control

When using a normal freshwater generator of the single-effect vacuum evaporator type, the freshwater production may, for guidance, be estimated as 0.03 t/24h per 1 kW heat, i.e.:

M_{fw} = 0.03 x Q_{jw} t/24h -15%/0% [3]

where

M_{fw} is the freshwater production in tons per 24 hours

and

Q_{jw} is to be stated in kW

If necessary, all the actually available jacket cooling water heat may be used provided that a special temperature control system ensures that the jacket cooling water temperature at the outlet from the engine does not fall below a certain level. Such a temperature control system may consist, e.g., of a special by-pass pipe installed in the jacket cooling water system, see Fig. 6.04.05, or a special built-in temperature control in the freshwater generator, e.g., an automatic start/stop function, or similar.

If such a special temperature control is not applied, we recommend limiting the heat utilised to maximum 50% of the heat actually available at specified MCR, and only using the freshwater generator at engine loads above 50%. Considering the cooler margin of 10% and the minus tolerance of -15%, this heat corresponds to 50 x(1.00-0.15)x0.9 = 38% of the jacket water cooler capacity $Q_{jw,M}$ used for dimensioning of the jacket water cooler.

Calculation of Freshwater Production for Derated Engine

Example 2:

Freshwater production *from a derated 6S70ME-C8-GI-TII with high efficiency MAN Diesel turbocharger type TCA and fixed pitch propeller.*

Based on the engine ratings below, this example will show how to calculate the expected available jacket cooling water heat removed from the diesel engine, together with the corresponding freshwater production from a freshwater generator.

The calculation is made for the service rating (S) of the diesel engine being 80% of the specified MCR.

Nominal MCR, (L_1) P_{L1}: 19,620 kW (100.0%) and 91.0 r/min (100.0%)

Specified MCR, (M) P_M: 16,677 kW (85.0%) and 81.9 r/min (90.0%)

Matching point, (O) P_O: 16,677 kW (85.0%) and 81.9 r/min (90.0%), P_O = 100.0% of P_M

Service rating, (S) P_S: 13,342 kW and 76.0 r/min, P_S = 80.0% of P_M and P_S = 80.0% of P_O

Ambient reference conditions: 20 °C air and 18 °C cooling water.

The expected available jacket cooling water heat at service rating is found as follows:

$Q_{jw,L1}$ = 2,840 kW from List of Capacities
$Q_{jw\%}$ = 88.5% using 85.0% power and 90.0% speed for O in Fig. 6.04.02

By means of equation [1], and using factor 0.88 for actual ambient condition the heat dissipation in the matching point (O) is found:

$$Q_{jw,O} = Q_{jw,L1} \times \frac{Q_{jw\%}}{100} \times 0.88$$

$$= 2{,}840 \times \frac{88.5}{100} \times 0.88 = 2{,}212 \text{ kW}$$

By means of equation [2], the heat dissipation in the service point (S) i.e. for 80.0% of matching power, is found:

k_p = 0.852 using 80.0% in Fig. 6.04.04
Q_{jw} = $Q_{jw,O} \times k_p$ = 2,212 x 0.852 = 1,884 kW -15%/0%

For the service point the corresponding expected obtainable freshwater production from a freshwater generator of the single effect vacuum evaporator type is then found from equation [3]:

M_{fw} = 0.03 x Q_{jw} = 0.03 x 1,884 = 56.5 t/24h -15%/0%

Exhaust Gas Amount and Temperature

Influencing factors

The exhaust gas data to be expected in practice depends, primarily, on the following three factors:

a) The specified MCR point of the engine (point M):

P_M : power in kW at SMCR point
n_M : speed in r/min at SMCR point

and to a certain degree on the matching point O with the percentage power $P_{O\%}$ = % of SMCR power:

$P_{O\%} = (P_O/P_M) \times 100\%$

b) The ambient conditions, and exhaust gas back-pressure:

T_{air} : actual ambient air temperature, in °C
p_{bar} : actual barometric pressure, in mbar
T_{CW} : actual scavenge air coolant temperature, in °C
Δp_M : exhaust gas back-pressure in mm WC at specified MCR

c) The continuous service rating of the engine (point S), valid for fixed pitch propeller or controllable pitch propeller (constant engine speed):

P_S : continuous service rating of engine, in kW

Calculation Method

To enable the project engineer to estimate the actual exhaust gas data at an arbitrary service rating, the following method of calculation may be used.

The partial calculations based on the above influencing factors have been summarised in equations [4] and [5].

M_{exh} : exhaust gas amount in kg/h, to be found
T_{exh} : exhaust gas temperature in °C, to be found

$$M_{exh} = M_{L1} \times \frac{P_M}{P_{L1}} \times \left\{1 + \frac{\Delta m_{M\%}}{100}\right\} \times \left\{1 + \frac{\Delta M_{amb\%}}{100}\right\} \times \left\{1 + \frac{\Delta m_{s\%}}{100}\right\} \times \frac{P_{S\%}}{100} \quad \text{kg/h} \quad +/-5\% \quad [4]$$

$$T_{exh} = T_{L1} + \Delta T_M + \Delta T_O + \Delta T_{amb} + \Delta T_S \quad °C \quad -/+15\ °C \quad [5]$$

where, according to 'List of capacities', i.e. referring to ISO ambient conditions and 300 mm WC back-pressure and specified/matched in L_1:
M_{L1}: exhaust gas amount in kg/h at nominal MCR (L_1)
T_{L1}: exhaust gas temperature after turbocharger in °C at nominal MCR (L_1)

Fig. 6.04.06: Summarising equations for exhaust gas amounts and temperatures

The partial calculations based on the influencing factors are described in the following:

a) Correction for choice of specified MCR point

When choosing a specified MCR point 'M' other than the nominal MCR point 'L_1', the resulting changes in specific exhaust gas amount and temperature are found by using as input in diagrams the corresponding percentage values (of L_1) for specified MCR power $P_{M\%}$ and speed $n_{M\%}$:
$P_{M\%} = P_M/P_{L1} \times 100\%$
$n_{M\%} = n_M/n_{L1} \times 100\%$

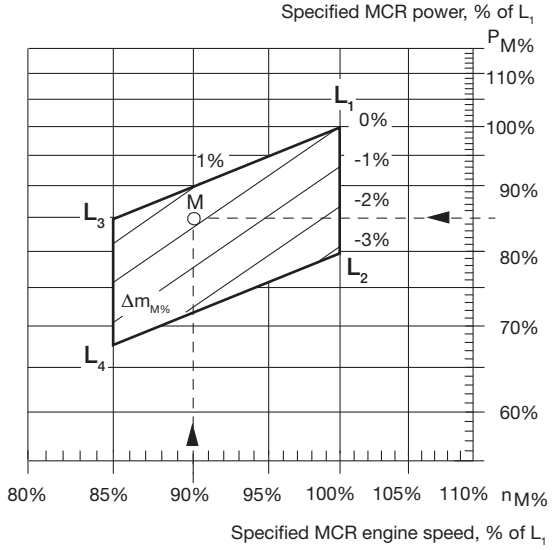

$\Delta m_{M\%} = 14 \times \ln (P_M/P_{L1}) - 24 \times \ln (n_M/n_{L1})$

178 51 11-7.2

Fig. 6.04.07: Change of specific exhaust gas amount, $\Delta m_{M\%}$ in % of L_1 value and independent of P_O

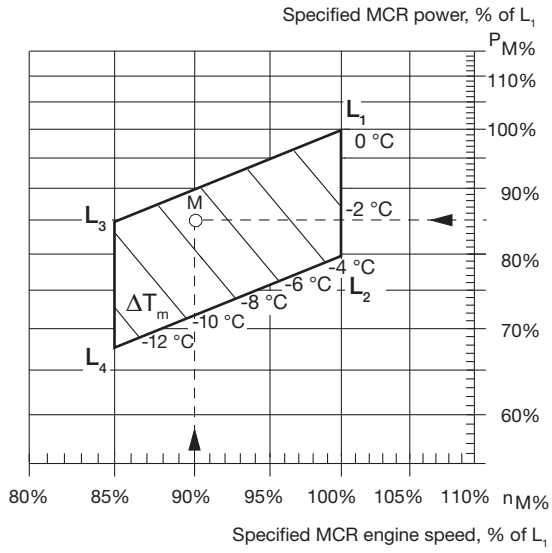

$\Delta T_M = 15 \times \ln (P_M/P_{L1}) + 45 \times \ln (n_M/n_{L1})$

178 51 13-0.2

Fig. 6.04.08: Change of exhaust gas temperature, ΔT_M in point M, in °C after turbocharger relative to L_1 value and valid for $P_O = P_M$

$\Delta m_{M\%}$: change of specific exhaust gas amount, in % of specific gas amount at nominal MCR (L_1), see Fig. 6.04.07.

ΔT_M : change in exhaust gas temperature after turbocharger relative to the L1 value, in °C, see Fig. 6.04.08. ($P_O = P_M$)

ΔT_O : extra change in exhaust gas temperature when matching point O lower than 100% M: $P_{O\%} = (P_O/P_M) \times 100\%$.

$\Delta T_O = - 0.3 \times (100 - P_{O\%})$ [6]

b) Correction for actual ambient conditions and back-pressure

For ambient conditions other than ISO 3046-1:2002 (E) and ISO 15550:2002 (E), and back-pressure other than 300 mm WC at specified MCR point (M), the correction factors stated in the table in Fig. 6.04.09 may be used as a guide, and the corresponding relative change in the exhaust gas data may be found from equations [7] and [8], shown in Fig. 6.04.10.

Parameter	Change	Change of exhaust gas temperature	Change of exhaust gas amount
Blower inlet temperature	+ 10° C	+ 16.0° C	- 4.1 %
Blower inlet pressure (barometric pressure)	+ 10 mbar	- 0.1° C	+ 0.3 %
Charge air coolant temperature (seawater temperature)	+ 10° C	+ 1.0° C	+ 1.9 %
Exhaust gas back pressure at the specified MCR point	+ 100 mm WC	+ 5.0° C	-1.1 %

Fig. 6.04.09: Correction of exhaust gas data for ambient conditions and exhaust gas back pressure

$\Delta M_{amb\%}$ = - 0.41 x (T_{air} - 25) + 0.03 x (p_{bar} - 1000) + 0.19 x (T_{CW} - 25) - 0.011 x (Δp_M - 300) % [7]

ΔT_{amb} = 1.6 x (T_{air} - 25) - 0.01 x (p_{bar} - 1000) +0.1 x (T_{CW} - 25) + 0.05 x (Δp_M - 300) °C [8]

where the following nomenclature is used:

$\Delta M_{amb\%}$: change in exhaust gas amount, in % of amount at ISO conditions

ΔT_{amb} : change in exhaust gas temperature, in °C compared with temperatures at ISO conditions

Fig. 6.04.10: Exhaust gas correction formula for ambient conditions and exhaust gas back pressure

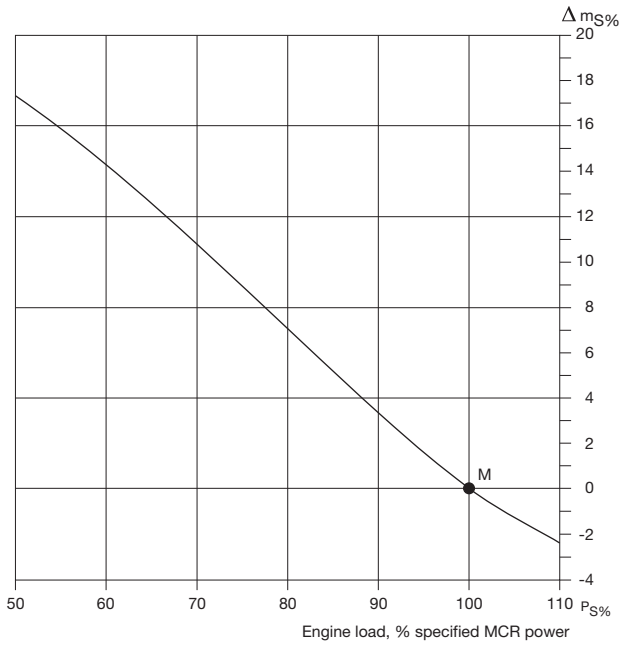

178 24 62-3.0

$P_{S\%}$ = (P_S/P_M) x 100%

$\Delta m_{S\%}$= 37 x (P_S/P_M)^3 - 87 x (P_S/P_M)^2 + 31 x (P_S/P_M) + 19

Fig. 6.04.11: Change of specific exhaust gas amount, $\Delta m_{s\%}$ in % at part load, and valid for FPP and CPP

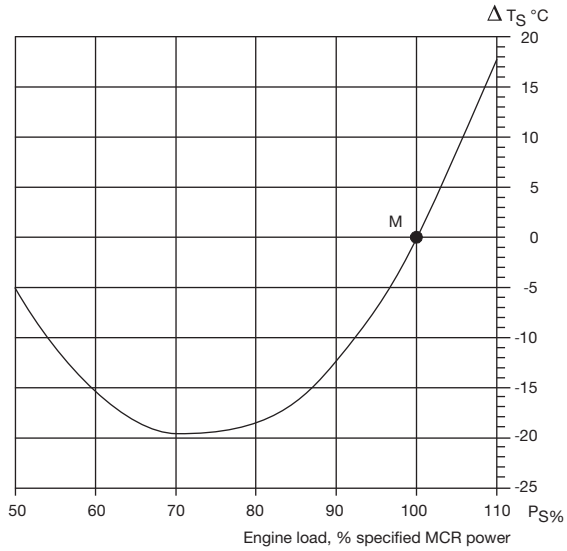

178 24 63-5.0

$P_{S\%}$ = (P_S/P_M) x 100%

ΔT_S = 280 x (P_S/P_M)^2 - 410 x (P_S/P_M) + 130

Fig. 6.04.12: Change of exhaust gas temperature, ΔT_S in °C at part load, and valid for FPP and CPP

c) Correction for engine load

Figs. 6.04.11 and 6.04.12 may be used, as guidance, to determine the relative changes in the specific exhaust gas data when running at part load, compared to the values in the specified MCR point, i.e. using as input $P_{S\%}$ = (P_S/P_M) x 100%:

$\Delta m_{s\%}$: change in specific exhaust gas amount, in % of specific amount at specified MCR point, see Fig. 6.04.11.

ΔT_s : change in exhaust gas temperature, in °C, see Fig. 6.04.12.

Calculation of Exhaust Data for Derated Engine

Example 3:

Expected exhaust gas data *for a derated 6S70ME-C8-GI-TII with high efficiency MAN Diesel turbocharger type TCA and fixed pitch propeller.*

Based on the engine ratings below, and by means of an example, this chapter will show how to calculate the expected exhaust gas amount and temperature at service rating, and for a given ambient reference condition different from ISO.

The calculation is made for the service rating (S) being 80% of the specified MCR power of the diesel engine.

Nominal MCR, (L_1) P_{L1}: 19,620 kW (100.0%) and 91.0 r/min (100.0%)

Specified MCR, (M) P_M: 16,677 kW (85.0%) and 81.9 r/min (90.0%)

Matching point, (O) P_O: 16,677 kW (85.0%) and 81.9 r/min (90.0%), P_O = 100.0% of P_M

Service rating, (S) P_S: 13,342 kW and 76.0 r/min, P_S = 80.0% of P_M

Reference conditions

Air temperature T_{air} ..... 20 °C
Scavenge air coolant temperature T_{CW} ..... 18 °C
Barometric pressure p_{bar} ..... 1,013 mbar
Exhaust gas back-pressure
at specified MCR Δp_M ..... 300 mm WC

a) Correction for choice of specified MCR point M and matching point O:

$$P_{M\%} = \frac{16,677}{19,620} \times 100 = 85.0\%$$

$$n_{M\%} = \frac{81.9}{91.0} \times 100 = 90.0\%$$

By means of Figs. 6.04.07 and 6.04.08:

$$\Delta m_{M\%} = + 0.25\%$$
$$\Delta T_M = - 7.2\ °C$$

As the engine is matched in O lower than 100% M, and $P_{O\%}$ = 100.0% of P_M

we get by means of equation [6]

$$\Delta T_O = - 0.3 \times (100 - 100.0) = - 0.0\ °C$$

b) Correction for ambient conditions and back-pressure:

By means of equations [7] and [8]:

$$\Delta M_{amb\%} = - 0.41 \times (20 - 25) + 0.03 \times (1,013 - 1,000) + 0.19 \times (18 - 25) - 0.011 \times (300 - 300)\%$$

$$\Delta M_{amb\%} = + 1.11\%$$

$$\Delta T_{amb} = 1.6 \times (20 - 25) - 0.01 \times (1,013 - 1,000) + 0.1 \times (18 - 25) + 0.05 \times (300 - 300)\ °C$$

$$\Delta T_{amb} = - 8.8\ °C$$

c) Correction for the engine load:

Service rating = 80% of specified MCR power
By means of Figs. 6.04.11 and 6.04.12:

$$\Delta m_{S\%} = + 7.1\%$$

$$\Delta T_S = - 18.8\ °C$$

Final calculation

By means of equations [4] and [5], the final result is found taking the exhaust gas flow M_{L1} and temperature T_{L1} from the 'List of Capacities':

M_{L1} = 175,800 kg/h

M_{exh} = 175,800 x $\frac{16,677}{19,620}$ x (1 + $\frac{+0.25}{100}$) x

(1 + $\frac{1.11}{100}$) x (1 + $\frac{7.1}{100}$) x $\frac{80}{100}$ = 129,776 kg/h

M_{exh} = 129,800 kg/h ±5%

The exhaust gas temperature

T_{L1} = 240 °C

T_{exh} = 240 - 7.2 - 0.0 - 8.8 - 18.8 = 205.2 °C

T_{exh} = 205.2 °C ∓15 °C

Exhaust gas data at specified MCR (ISO)

At specified MCR (M), the running point may be in equations [4] and [5] considered as a service point where $P_{S\%}$ = 100, $\Delta m_{s\%}$ = 0.0 and ΔT_s = 0.0.

For ISO ambient reference conditions where $\Delta M_{amb\%}$ = 0.0 and ΔT_{amb} = 0.0, the corresponding calculations will be as follows:

$M_{exh,M}$ = 175,800 x $\frac{16,677}{19,620}$ x (1 + $\frac{+0.25}{100}$) x (1 + $\frac{0.0}{100}$)

x (1 + $\frac{0.0}{100}$) x $\frac{100.0}{100}$ = 149,804 kg/h

$M_{exh,M}$ = 149,800 kg/h ±5%

$T_{exh,M}$ = 240 - 7.2 - 0.0 + 0 + 0 = 232.8 °C

$T_{exh,M}$ = 232.8 °C ∓15 °C

The air consumption will be:

149,804 x 0.982 kg/h = 147,107 kg/h <=>
147,107/3,600 kg/s = 40.9 kg/s

Fuel

7

Gas System

In order to make it possible to use the Boil Off Gas from an LNG Carrier as fuel in low speed diesels as well, MAN Diesel has readdressed this technology based on our ME engine concept.

The benefits of the greater control given tanks to the ME engine range further enhance the operational reasons for introducing this option.

Some years ago, MAN Diesel developed the MC range of engines for dual fuel. These were designated MC-GI (Gas Injection). The combustion cycle was initiated by the injection of pilot fuel oil, followed by the main gas injection. The fuel injection timing on these dual fuel engines was mechanically controlled, but in the electronically controlled version, like all ME engines, it can be user-defined and is subject to greater control and flexibility, thereby allowing the dual fuel concept to be further optimised.

The efficiency of -GI dual fuel engines is the same as for ordinary ME engines, owing to the diesel cycle. The system efficiency will be higher than that of other gas consuming propulsion systems, incl. the dual fuel diesel electric even when considering the compressor power.

Full redundancy as required by the International Association of Classification Societies' (IACS) can be met with one compressor package with either one reliquefaction unit or one oxidizer as back-up. The system configuration is shown in Fig. 7.00.01.

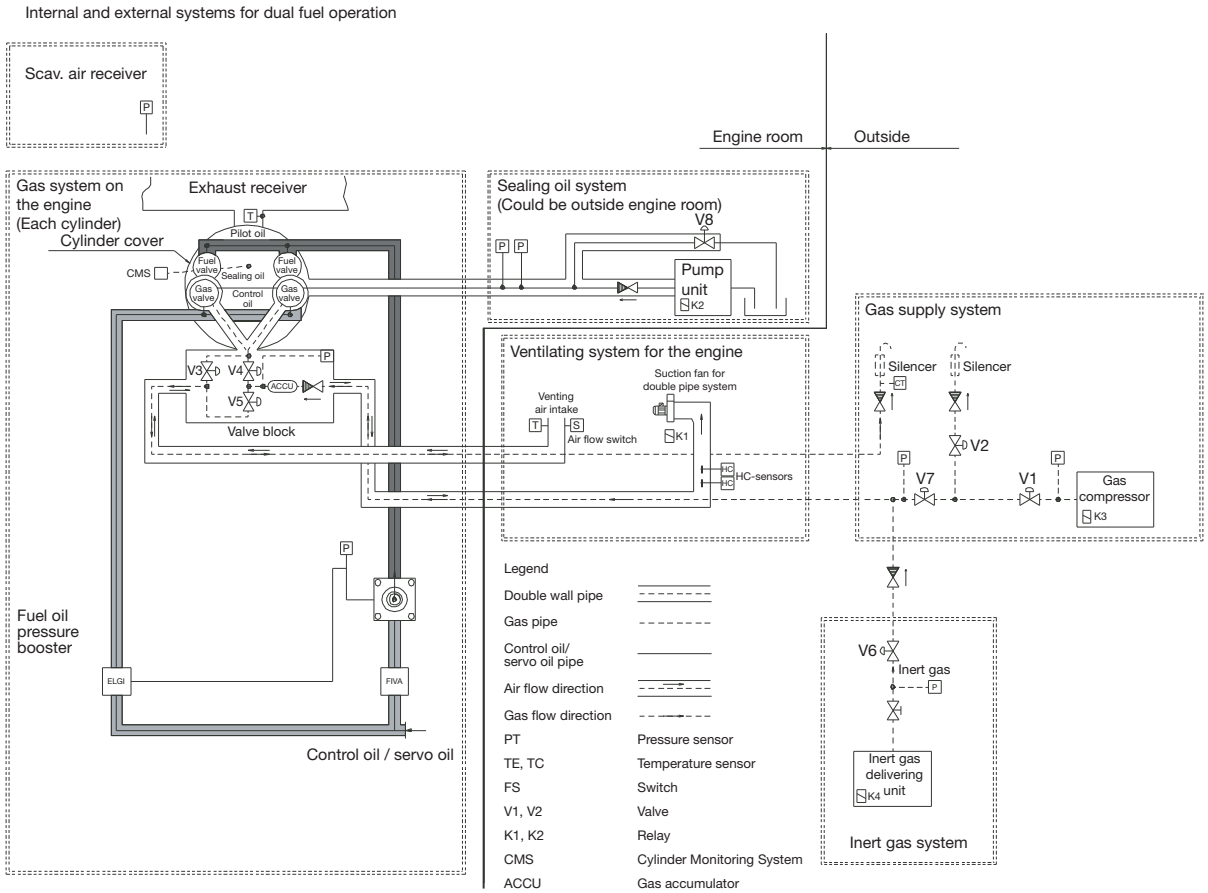

Fig. 7.00.01: The -GI engine and gas handling units

The -GI specific engine parts

The new modified parts of the -GI engine is pointed out in Fig. 7.00.02 cross-section of a ME-GI engine, comprising gas supply piping, large-volume accumulator on the (slightly modified) cylinder cover with gas injection valves, and HCU with ELGI valve for control of the injected gas amount. Further to this, there are small modifications to the exhaust gas receiver, and the control and manoeuvring system.

Apart from these systems on the engine, the engine auxiliaries will comprise some new units, the most important ones being:

- High-pressure gas compressor supply system, including a cooler, to raise the pressure to 250-300 bar, which is the pressure required at the engine inlet.
- Pulsation/buffer tank including a condensate separator.
- Compressor control system.
- Safety systems, which ex. includes a hydro-carbon analyser for checking the hydro-carbon content of the air in the compressor room and in the double-wall gas pipes.
- Ventilation system, which ventilates the outer pipe of the double-wall piping completely.
- Sealing oil system, delivering sealing oil to the gas valves separating the control oil and the gas.
- Inert gas system, which enables purging of the gas system on the engine with inert gas.

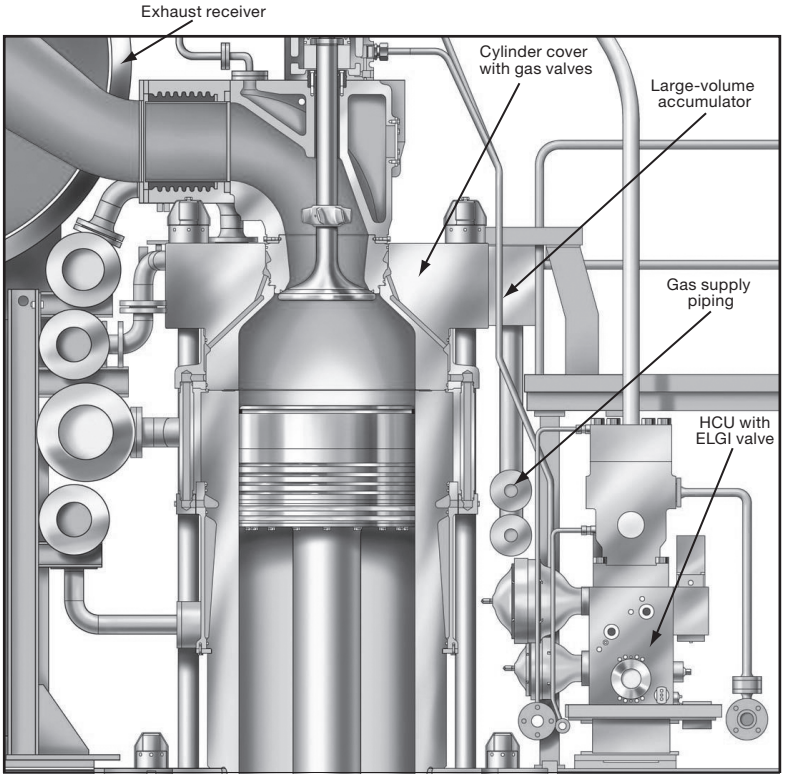

178 53 60-8.0

Fig. 7.00.02: New modified parts on the ME-GI engine

Gas supply piping

The layout of double-wall piping system for gas is shown in Fig. 7.00.03. The high-pressure gas from the compressor-unit flows through the main pipe via narrow and flexible branch pipes to each cylinder's gas valve block and large-volume accumulator. The narrow and flexible branch pipes perform two important tasks:

- They separate each cylinder unit from the rest in terms of gas dynamics, utilising the well-proven design philosophy of the ME engine's fuel oil system.
- They act as flexible connections between the stiff main pipe system and the engine structure, safeguarding against extra-stresses in the main and branch pipes caused by the inevitable differences in thermal expansion of the gas pipe system and the engine structure.

The large-volume accumulator, containing about 20 times the injection amount per stroke at MCR, also performs two important tasks:

- It supplies the gas amount for injection at only a slight, but predetermined, pressure drop.
- It forms an important part of the safety system (as described later).

Since the gas supply system is a common rail system, the gas injection valve must be controlled by another system, i.e. the control oil system. This, in principle, consists of the ME hydraulic control (servo) oil system and an ELGI valve, supplying high-pressure control oil to the gas injection valve, thereby control-ling the timing and opening of the gas valve.

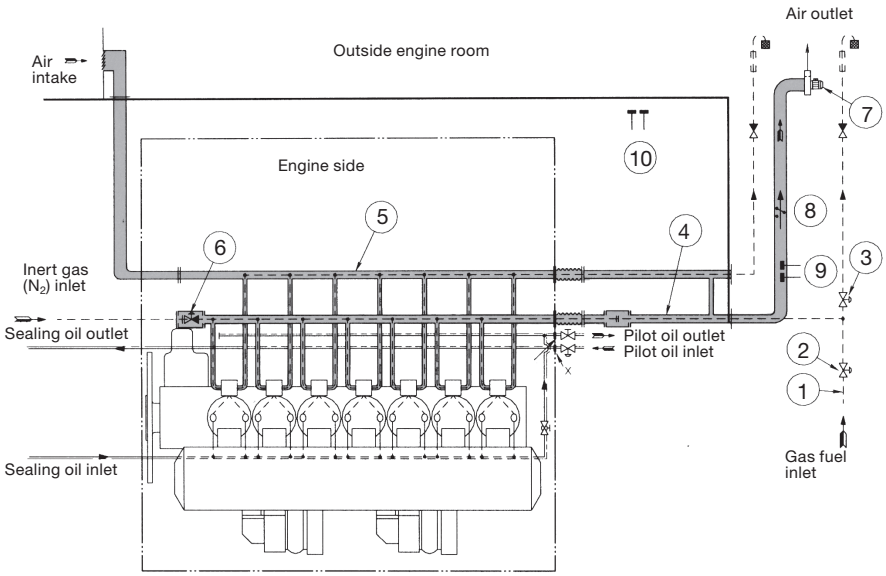

1. High pressure pipe from gas compressor
2. Main gas valve
3. Main venting valve
4. Main gas pipe (double pipe)
5. Main venting pipe (double pipe)
6. Inert gas valve in main gas pipe
7. Suction fan
8. Flow control
9. HC sensors in double wall pipes

178 53 62-1.0

Fig. 7.00.03: Layout of double-wall piping system for gas

The -GI fuel injection system

As can be seen in Fig. 7.00.04, the normal fuel oil pressure booster, which supplies pilot oil in the dual fuel operation mode, is connected to the ELGI valve by a pressure gauge and an on/off valve incorporated in the ELGI valve.

By the control system, the engine can be operated in the various relevant modes: normal ‘dual-fuel mode’ with minimum pilot oil amount, ‘specified gas mode’ with injection of a fixed gas amount, and the ‘fuel-oil-only mode’.

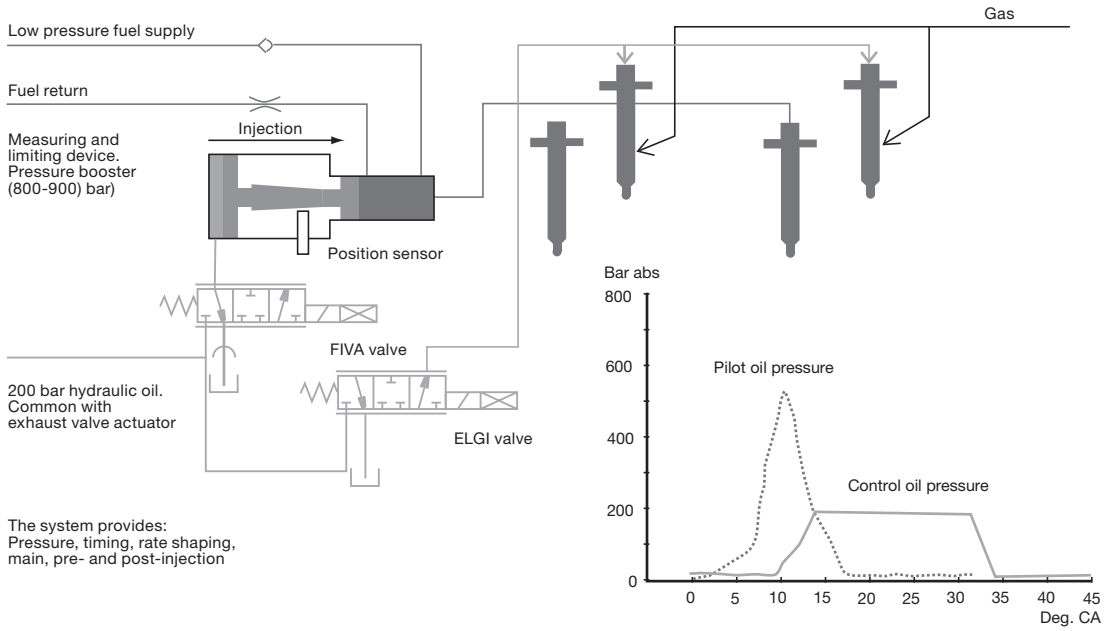

178 53 63-3.0

Fig. 7.00.04: The -GI fuel injection system

Pressurised Fuel Oil System

The system is so arranged that both diesel oil and heavy fuel oil can be used, see Fig. 7.01.01.

From the service tank the fuel is led to an electrically driven supply pump by means of which a pressure of approximately 4 bar can be maintained in the low pressure part of the fuel circulating system, thus avoiding gasification of the fuel in the venting box in the temperature ranges applied.

The venting box is connected to the service tank via an automatic deaerating valve, which will release any gases present, but will retain liquids.

From the low pressure part of the fuel system the fuel oil is led to an electrically-driven circulating pump, which pumps the fuel oil through a heater and a full flow filter situated immediately before the inlet to the engine.

The fuel injection is performed by the electronically controlled pressure booster located on the Hydraulic Cylinder Unit (HCU), one per cylinder, which also contains the actuator for the electronic exhaust valve activation.

The Cylinder Control Units (CCU) of the Engine Control System (described in Section 16.01) calculate the timing of the fuel injection and the exhaust valve activation.

To ensure ample filling of the HCU, the capacity of the electrically-driven circulating pump is higher than the amount of fuel consumed by the diesel engine. Surplus fuel oil is recirculated from the engine through the venting box.

To ensure a constant fuel pressure to the fuel injection pumps during all engine loads, a spring loaded overflow valve is inserted in the fuel oil system on the engine.

The fuel oil pressure measured on the engine (at fuel pump level) should be 7-8 bar, equivalent to a circulating pump pressure of 10 bar.

Fuel considerations

When the engine is stopped, the circulating pump will continue to circulate heated heavy fuel through the fuel oil system on the engine, thereby keeping the fuel pumps heated and the fuel valves deaerated. This automatic circulation of preheated fuel during engine standstill is the background for our recommendation: *constant operation on heavy fuel*.

In addition, if this recommendation was not followed, there would be a latent risk of diesel oil and heavy fuels of marginal quality forming incompatible blends during fuel change over or when operating in areas with restrictions on sulpher content in fuel oil due to exhaust gas emission control.

In special circumstances a change-over to diesel oil may become necessary – and this can be performed at any time, even when the engine is not running. Such a change-over may become necessary if, for instance, the vessel is expected to be inactive for a prolonged period with cold engine e.g. due to:

- docking
- stop for more than five days
- major repairs of the fuel system, etc.

The built-on overflow valves, if any, at the supply pumps are to be adjusted to 5 bar, whereas the external bypass valve is adjusted to 4 bar. The pipes between the tanks and the supply pumps shall have minimum 50% larger passage area than the pipe between the supply pump and the circulating pump.

If the fuel oil pipe ‘X’ at inlet to engine is made as a straight line immediately at the end of the engine, it will be necessary to mount an expansion joint. If the connection is made as indicated, with a bend immediately at the end of the engine, no expansion joint is required.

Fuel Oil System

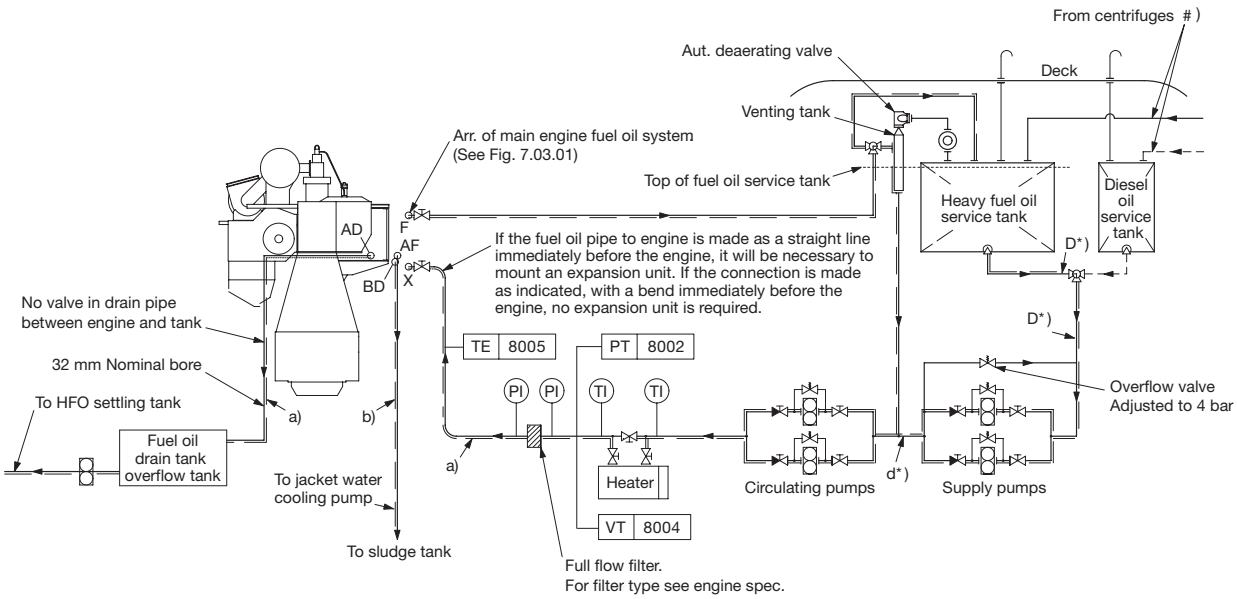

#) Approximately the following quantity of fuel oil should be treated in the centrifuges: 0.23 l/kwh as explained in Section 7.05. The capacity of the centrifuges to be according to manufacturer's recommendation.

*) D to have min. 50% larger passage area than d.

178 52 19-7.4

- - - - - - - - - - - - Diesel oil
———————— Heavy fuel oil
— — — — — — Heated pipe with insulation

a) Tracing fuel oil lines: Max.150°C
b) Tracing drain lines: By jacket cooling water

The letters refer to the list of 'Counterflanges'

Fig. 7.01.01: Fuel oil system

Drain of clean fuel oil from HCU, pumps, pipes

The HCU Fuel Oil Pressure Booster has a leakage drain of clean fuel oil from the umbrella sealing through 'AD' to the fuel oil drain tank.

The flow rate in litres is approximately as listed in Table 7.01.01.

Engine	Flow rate, litres/cyl. h.
K98ME/ME-C, S90ME-C	1.25
K90ME/ME-C, S/K80ME-C, S70ME-C/ ME-C-GI, L70ME-C, S65ME-C/-GI	0.75
S/L60ME-C, S60ME-C-GI	0.60

Table 7.01.01: Approximate flow in HCU leakage drain.

This drained clean oil will, of course, influence the measured SFOC, but the oil is not wasted, and the quantity is well within the measuring accuracy of the flowmeters normally used.

The main purpose of the drain 'AF' is to collect pure fuel oil from the fuel pumps as well as the unintentional leakage from the high pressure pipes. The drain oil is led to a sludge tank and can be pumped to the Heavy Fuel Oil service tank or to the settling tank.

The 'AF' drain is provided with a box for giving alarm in case of leakage in a high pressure pipe.

The size of the sludge tank is determined on the basis of the draining intervals, the classification society rules, and on whether it may be vented directly to the engine room.

Drains 'AD' and 'AF' are shown in Fig. 7.03.01.

Drain of contaminated fuel etc.

Leakage oil, in shape of fuel and lubricating oil contaminated with water, dirt etc. and collected by the HCU Base Plate top plate, is drained off through the bedplate drains 'AE'.

Drain 'AE' is shown in Fig. 8.07.02.

Heating of fuel drain pipes

Owing to the relatively high viscosity of the heavy fuel oil, it is recommended that the drain pipes and the fuel oil drain tank are heated to min. 50 °C, but max. 100 °C.

The drain pipes between engine and tanks can be heated by the jacket water, as shown in Fig. 7.01.01 'Fuel pipe heating' as flange 'BD'.

Fuel oil flow velocity and viscosity

For external pipe connections, we prescribe the following maximum flow velocities:

Marine diesel oil ..... 1.0 m/s
Heavy fuel oil..... 0.6 m/s

The fuel viscosity is influenced by factors such as emulsification of water into the fuel for reducing the NO_x emission. This is further described in Section 7.06.

An emulsification arrangement for the main engine is described in our publication:

Exhaust Gas Emission Control Today and Tomorrow

Further information about fuel oil specifications is available in our publication:

Guidelines for Fuels and Lubes Purchasing

The publications are available at www.mandieselturbo.com under 'Products' → 'Marine Engines & Systems' → 'Low Speed' → 'Technical Papers'.

Fuel Oils

Marine diesel oil:

Marine diesel oil ISO 8217, Class DMB
British Standard 6843, Class DMB
Similar oils may also be used

Heavy fuel oil (HFO)

Most commercially available HFO with a viscosity below 700 cSt at 50 °C (7,000 sec. Redwood I at 100 °F) can be used.

For guidance on purchase, reference is made to ISO 8217:1996 and ISO 8217:2005, British Standard 6843 and to CIMAC recommendations regarding requirements for heavy fuel for diesel engines, fourth edition 2003, in which the maximum acceptable grades are RMH 700 and RMK 700. The above-mentioned ISO and BS standards supersede BSMA 100 in which the limit was M9.

The data in the above HFO standards and specifications refer to fuel as delivered to the ship, i.e. before on-board cleaning.

In order to ensure effective and sufficient cleaning of the HFO, i.e. removal of water and solid contaminants, the fuel oil specific gravity at 15 °C (60 °F) should be below 0.991, unless modern types of centrifuges with adequate cleaning abilities are used.

Higher densities can be allowed if special treatment systems are installed.

Current analysis information is not sufficient for estimating the combustion properties of the oil. This means that service results depend on oil properties which cannot be known beforehand. This especially applies to the tendency of the oil to form deposits in combustion chambers, gas passages and turbines. It may, therefore, be necessary to rule out some oils that cause difficulties.

Guiding heavy fuel oil specification

Based on our general service experience we have, as a supplement to the above mentioned standards, drawn up the guiding HFO specification shown below.

Heavy fuel oils limited by this specification have, to the extent of the commercial availability, been used with satisfactory results on MAN B&W two-stroke low speed diesel engines.

The data refers to the fuel as supplied i.e. before any on-board cleaning.

Guiding specification (maximum values)		
Density at 15 °C	kg/m^3	≤ 1.010*
Kinematic viscosity at 100 °C at 50 °C	 cSt cSt	 ≤ 55 ≤ 700
Flash point	°C	≥ 60
Pour point	°C	≤ 30
Carbon residue	% (m/m)	≤ 22
Ash	% (m/m)	≤0.15
Total sediment potential	% (m/m)	≤0.10
Water	% (v/v)	≤ 0.5
Sulphur	% (m/m)	≤ 4.5
Vanadium	mg/kg	≤ 600
Aluminum + Silicon	mg/kg	≤ 80
Equal to ISO 8217:2005 - RMK 700 / CIMAC recommendation No. 21 - K700		
* Provided automatic clarifiers are installed m/m = mass v/v = volume		

If heavy fuel oils with analysis data exceeding the above figures are to be used, especially with regard to viscosity and specific gravity, the engine builder should be contacted for advice regarding possible fuel oil system changes.

Fuel Oil Pipes and Drain Pipes

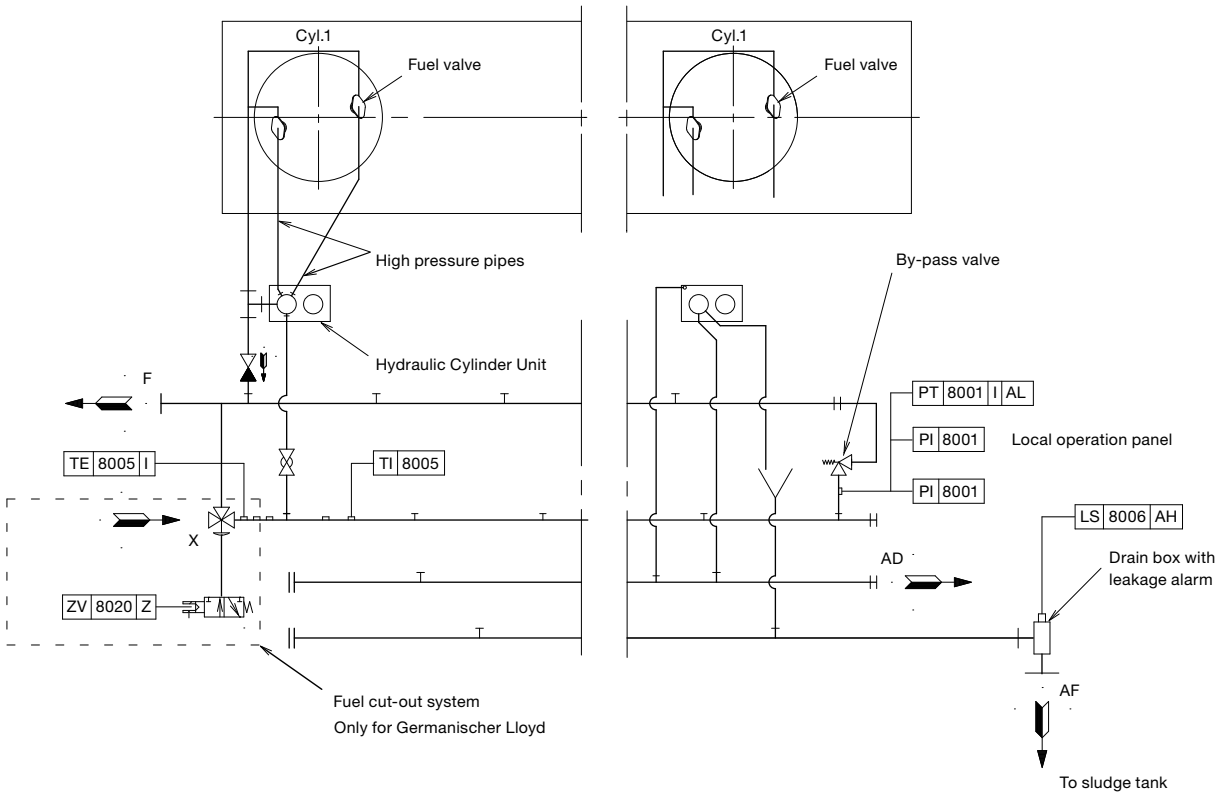

The letters refer to list of 'Counterflanges'

The item No. refer to 'Guidance values automation'

126 40 91-7.8.0b

Fig. 7.03.01: Fuel oil and drain pipes

Fuel Oil Pipe Insulation

Insulation of fuel oil pipes and fuel oil drain pipes should not be carried out until the piping systems have been subjected to the pressure tests specified and approved by the respective classification society and/or authorities, Fig. 7.04.01.

The directions mentioned below include insulation of hot pipes, flanges and valves with a surface temperature of the complete insulation of maximum 55 °C at a room temperature of maximum 38 °C. As for the choice of material and, if required, approval for the specific purpose, reference is made to the respective classification society.

Fuel oil pipes

The pipes are to be insulated with 20 mm mineral wool of minimum 150 kg/m^3 and covered with glass cloth of minimum 400 g/m^2.

Fuel oil pipes and heating pipes together

Two or more pipes can be insulated with 30 mm wired mats of mineral wool of minimum 150 kg/m^3 covered with glass cloth of minimum 400 g/m^2.

Flanges and valves

The flanges and valves are to be insulated by means of removable pads. Flange and valve pads are made of glass cloth, minimum 400 g/m^2, containing mineral wool stuffed to minimum 150 kg/m^3.

Thickness of the pads to be:
Fuel oil pipes ..... 20 mm
Fuel oil pipes and heating pipes together.... 30 mm

The pads are to be fitted so that they lap over the pipe insulating material by the pad thickness. At flanged joints, insulating material on pipes should not be fitted closer than corresponding to the minimum bolt length.

Mounting

Mounting of the insulation is to be carried out in accordance with the supplier's instructions.

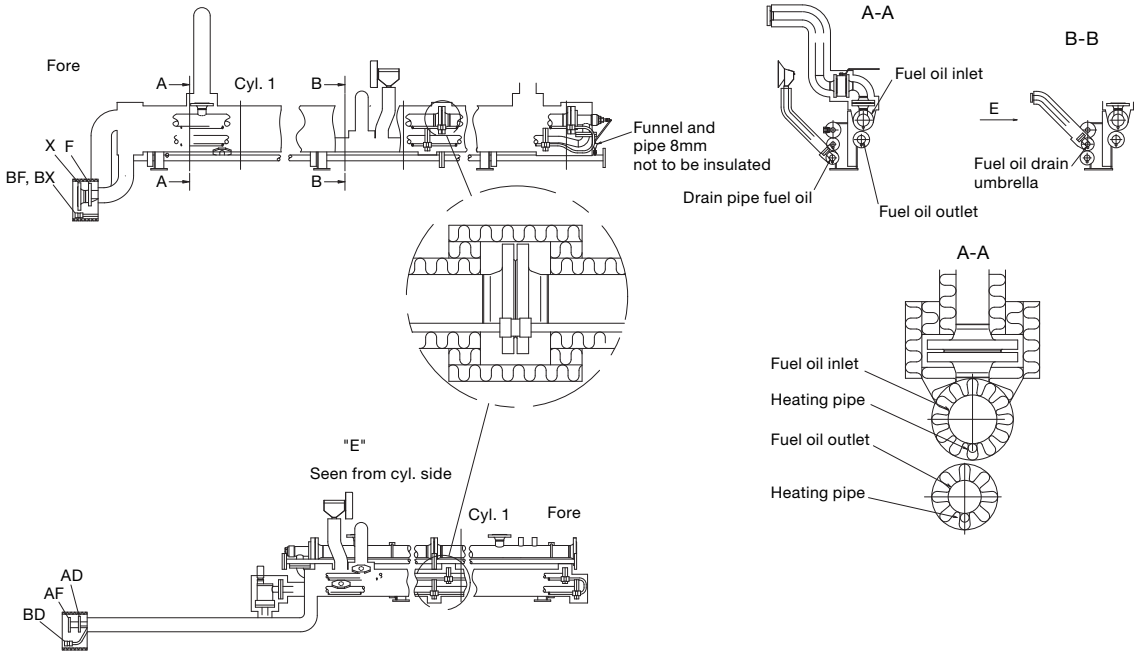

Fig. 7.04.01: Details of fuel oil pipes insulation, option: 4 35 121. Example from 98-50 MC engine

178 50 65 -0.2

Heat Loss in Piping

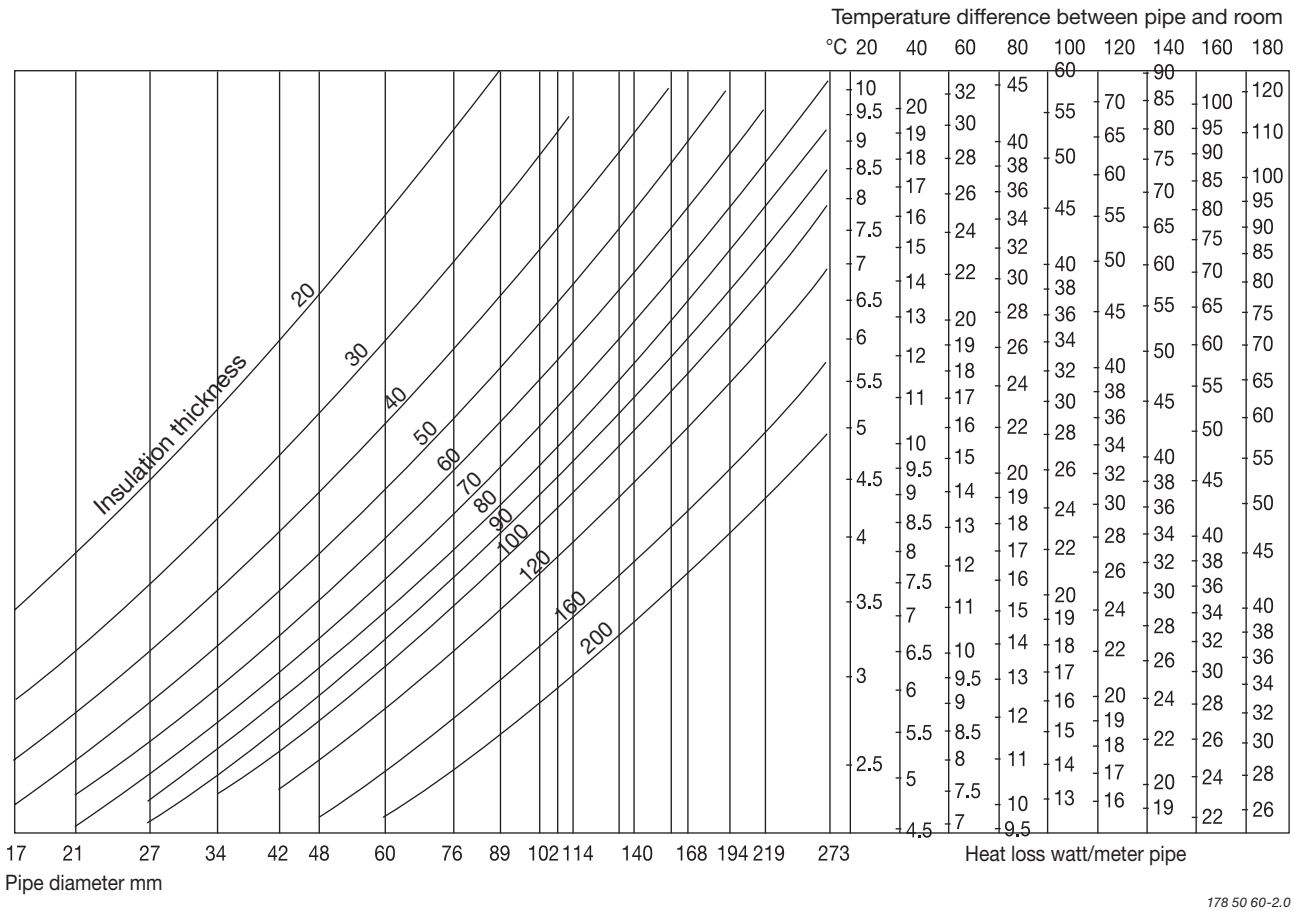

Fig. 7.04.02: Heat loss/Pipe cover

Fuel Oil Pipe Heat Tracing

The steam tracing of the fuel oil pipes is intended to operate in two situations:

1. When the circulation pump is running, there will be a temperature loss in the piping, see Fig. 7.04.02. This loss is very small, therefore tracing in this situation is only necessary with very long fuel supply lines.

2. When the circulation pump is stopped with heavy fuel oil in the piping and the pipes have cooled down to engine room temperature, as it is not possible to pump the heavy fuel oil. In this situation the fuel oil must be heated to pumping temperature of about 50 °C.

   To heat the pipe to pumping level we recommend to use 100 watt leaking/meter pipe.

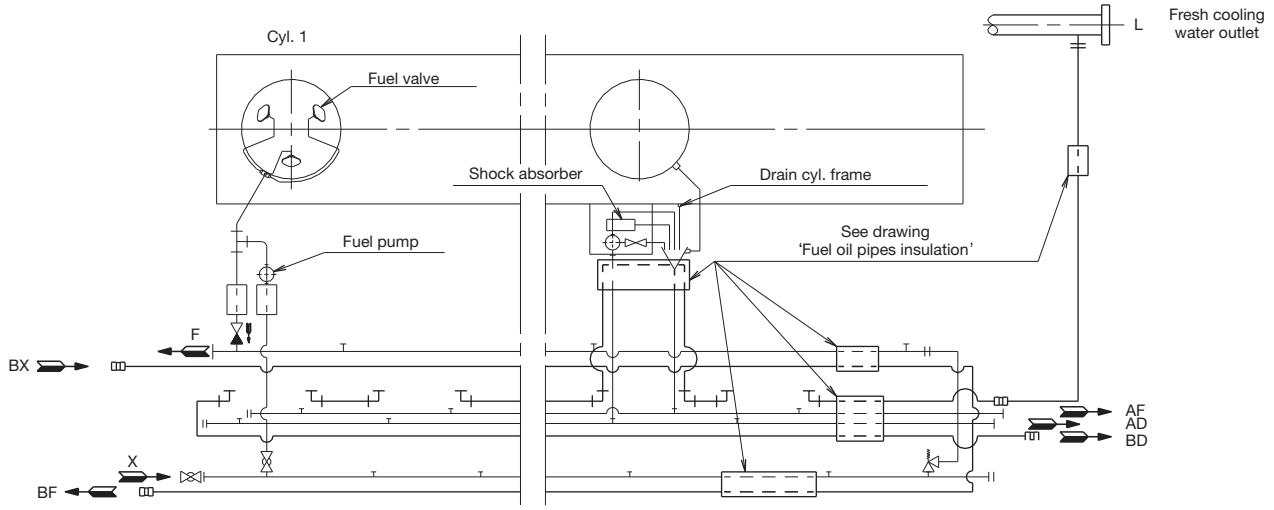

The letters refer to list of 'Counterflanges'

178 50 62-5.0

Fig. 7.04.03: Fuel oil pipe heat tracing

Fuel Oil and Lubricating Oil Pipe Spray Shields

In order to fulfil IMO regulations, fuel oil and lubricating oil pipe assemblies are to be enclosed by spray shields as shown in Fig. 7.04.04a and b.

To avoid leaks, the spray shields are to be installed after pressure testing of the pipe system.

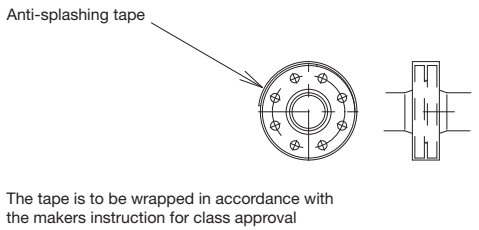

Fig. 7.04.04a: Spray Shields by anti-splashing tape

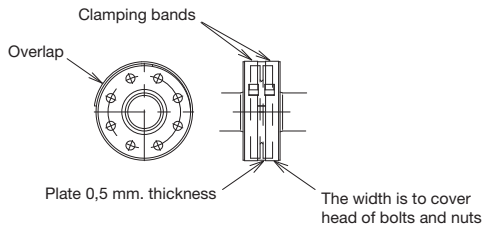

178 52 55-5.2

Fig. 7.04.04b: Spray Shields by clamping bands

Components for Fuel Oil System

Fuel oil centrifuges

The manual cleaning type of centrifuges are not to be recommended, neither for attended machinery spaces (AMS) nor for unattended machinery spaces (UMS). Centrifuges must be self-cleaning, either with total discharge or with partial discharge.

Distinction must be made between installations for:

- Specific gravities < 0.991 (corresponding to ISO 8217 and British Standard 6843 from RMA to RMH, and CIMAC from A to H-grades
- Specific gravities > 0.991 and (corresponding to CIMAC K-grades).

For the latter specific gravities, the manufacturers have developed special types of centrifuges, e.g.:

Alfa Laval ..... Alcap
Westfalia ..... Unitrol
Mitsubishi ..... E-Hidens II

The centrifuge should be able to treat approximately the following quantity of oil:

0.23 litres/kWh

This figure includes a margin for:

- Water content in fuel oil
- Possible sludge, ash and other impurities in the fuel oil
- Increased fuel oil consumption, in connection with other conditions than ISO standard condition
- Purifier service for cleaning and maintenance.

The size of the centrifuge has to be chosen according to the supplier's table valid for the selected viscosity of the Heavy Fuel Oil. Normally, two centrifuges are installed for Heavy Fuel Oil (HFO), each with adequate capacity to comply with the above recommendation.

A centrifuge for Marine Diesel Oil (MDO) is not a must. However, MAN Diesel recommends that at least one of the HFO purifiers can also treat MDO.

If it is decided after all to install an individual purifier for MDO on board, the capacity should be based on the above recommendation, or it should be a centrifuge of the same size as that for HFO.

The *Nominal MCR* is used to determine the total installed capacity. Any derating can be taken into consideration in border-line cases where the centrifuge that is one step smaller is able to cover *Specified MCR*.

Fuel oil supply pump

This is to be of the screw or gear wheel type.

Fuel oil viscosity, specified.... up to 700 cSt at 50 °C
Fuel oil viscosity maximum ..... 1000 cSt
Pump head ..... 4 bar
Fuel oil flow ..... see 'List of Capacities'
Delivery pressure ..... 4 bar
Working temperature ..... 100 °C
Minimum temperature ..... 50 °C

The capacity stated in 'List of Capacities' is to be fulfilled with a tolerance of: ÷0% to +15% and shall also be able to cover the back-flushing, see 'Fuel oil filter'.

Fuel oil circulating pump

This is to be of the screw or gear wheel type.

Fuel oil viscosity, specified.... up to 700 cSt at 50 °C
Fuel oil viscosity normal ..... 20 cSt
Fuel oil viscosity maximum ..... 1000 cSt
Fuel oil flow ..... see 'List of Capacities'
Pump head ..... 6 bar
Delivery pressure ..... 10 bar
Working temperature ..... 150 °C

The capacity stated in 'List of Capacities' is to be fulfilled with a tolerance of: ÷0% to +15% and shall also be able to cover the back-flushing, see 'Fuel oil filter'.

Pump head is based on a total pressure drop in filter and preheater of maximum 1.5 bar.

Fuel Oil Heater

The heater is to be of the tube or plate heat exchanger type.

The required heating temperature for different oil viscosities will appear from the 'Fuel oil heating chart', Fig. 7.05.01. The chart is based on information from oil suppliers regarding typical marine fuels with viscosity index 70-80.

Since the viscosity after the heater is the controlled parameter, the heating temperature may vary, depending on the viscosity and viscosity index of the fuel.

Recommended viscosity meter setting is 10-15 cSt.

Fuel oil viscosity specified ... up to 700 cSt at 50°C
Fuel oil flow ..... see capacity of fuel oil circulating pump
Heat dissipation ..... see 'List of Capacities'
Pressure drop on fuel oil side .....maximum 1 bar
Working pressure ..... 10 bar
Fuel oil inlet temperature.....approx. 100 °C
Fuel oil outlet temperature ..... 150 °C
Steam supply, saturated .....7 bar abs

To maintain a correct and constant viscosity of the fuel oil at the inlet to the main engine, the steam supply shall be automatically controlled, usually based on a pneumatic or an electrically controlled system.

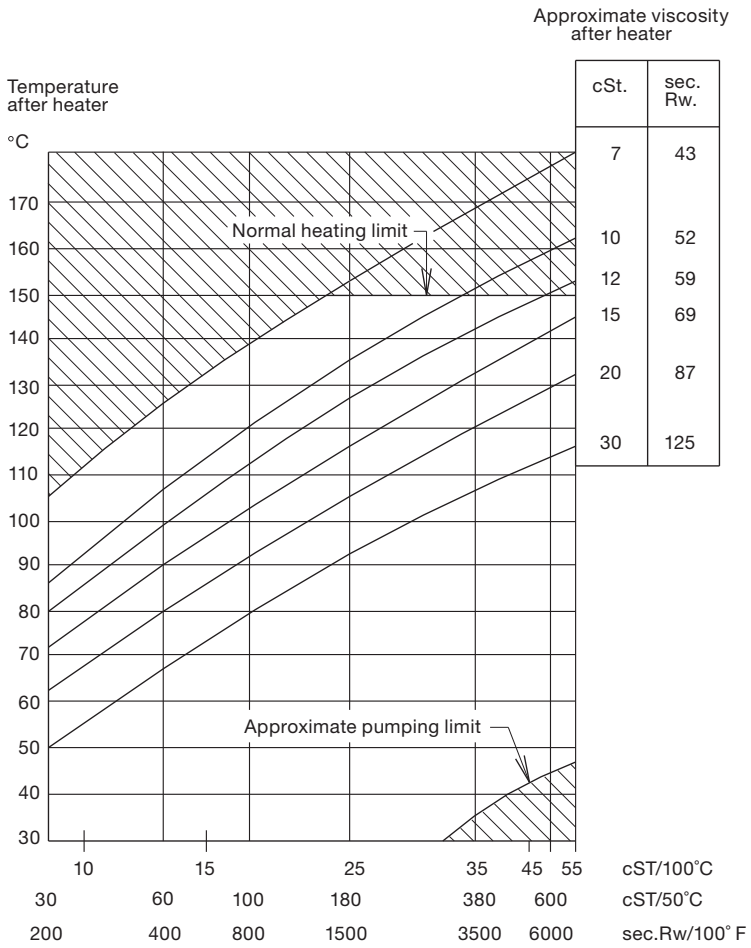

178 06 28-0.1

Fig. 7.05.01: Fuel oil heating chart

Fuel oil filter

The filter can be of the manually cleaned duplex type or an automatic filter with a manually cleaned bypass filter.

If a **double filter** (duplex) is installed, it should have sufficient capacity to allow the specified full amount of oil to flow through each side of the filter at a given working temperature with a max. 0.3 bar pressure drop across the filter (clean filter).

If a **filter with backflushing** arrangement is installed, the following should be noted. The required oil flow specified in the 'List of capacities', i.e. the delivery rate of the fuel oil supply pump and the fuel oil circulating pump, should be increased by the amount of oil used for the backflushing, so that the fuel oil pressure at the inlet to the main engine can be maintained during cleaning.

In those cases where an **automatically cleaned filter** is installed, it should be noted that in order to activate the cleaning process, certain makers of filters require a greater oil pressure at the inlet to the filter than the pump pressure specified. Therefore, the pump capacity should be adequate for this purpose, too.

The fuel oil filter should be based on heavy fuel oil of: 130 cSt at 80 °C = 700 cSt at 50 °C = 7000 sec Redwood I/100 °F.

Fuel oil flow ..... see 'List of capacities'
Working pressure ..... 10 bar
Test pressure..... according to class rule
Absolute fineness..... 50 µm
Working temperature ..... maximum 150 °C
Oil viscosity at working temperature ..... 15 cSt
Pressure drop at clean filter..... maximum 0.3 bar
Filter to be cleaned at a pressure
drop of ..... maximum 0.5 bar

Note:
Absolute fineness corresponds to a nominal fineness of approximately 35 µm at a retaining rate of 90%.

The filter housing shall be fitted with a steam jacket for heat tracing.

Fuel oil venting box

The design of the Fuel oil venting box is shown in Fig. 7.05.02. The size is chosen according to the maximum flow of the fuel oil circulation pump, which is listed in section 6.03.

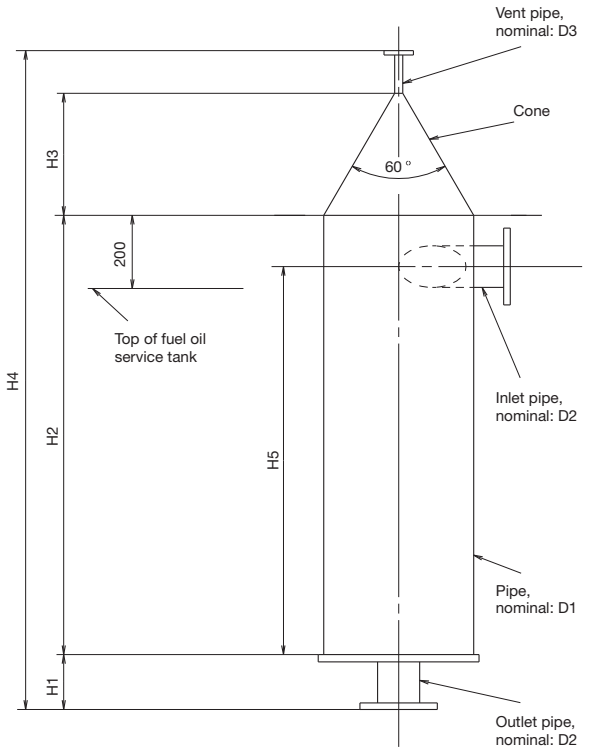

Flow m³/h	Dimensions in mm							
Q (max.)*	D1	D2	D3	H1	H2	H3	H4	H5
1.3	150	32	15	100	600	171.3	1,000	550
2.1	150	40	15	100	600	171.3	1,000	550
5.0	200	65	15	100	600	171.3	1,000	550
8.4	400	80	15	150	1,200	333.5	1,800	1,100
11.5	400	90	15	150	1,200	333.5	1,800	1,100
19.5	400	125	15	150	1,200	333.5	1,800	1,100
29.4	500	150	15	150	1,500	402.4	2,150	1,350
43.0	500	200	15	150	1,500	402.4	2,150	1,350

* The maximum flow of the fuel oil circulation pump

Fig. 07.05.02: Fuel oil venting box

Flushing of the fuel oil system

Before starting the engine for the first time, the system on board has to be flushed in accordance with MAN Diesel's recommendations 'Flushing of Fuel Oil System' which is available on request.

Water In Fuel Emulsification

The emulsification of water into the fuel oil reduces the NO_x emission with about 1% per 1% water added to the fuel up to about 20% without modification of the engine fuel injection equipment.

A Water In Fuel emulsion (WIF) mixed for this purpose and based on Heavy Fuel Oil (HFO) is stable for a long time, whereas a WIF based on Marine Diesel Oil is only stable for a short period of time unless an emulsifying agent is applied.

As both the MAN B&W two-stroke main engine and the MAN Diesel GenSets are designed to run on emulsified HFO, it can be used for a common system.

It is supposed below, that both the main engine and GenSets are running on the same fuel, either HFO or a homogenised HFO-based WIF.

Special arrangements are available on request for a more sophisticated system in which the GenSets can run with or without a homogenised HFO-based WIF, if the main engine is running on that.

Please note that the fuel pump injection capacity shall be confirmed for the main engine as well as the GenSets for the selected percentage of water in the WIF.

Temperature and pressure

When water is added by emulsification, the fuel viscosity increases. In order to keep the injection viscosity at 10-15 cSt and still be able to operate on up to 700 cSt fuel oil, the heating temperature has to be increased to about 170 °C depending on the water content.

The higher temperature calls for a higher pressure to prevent cavitation and steam formation in the system. The inlet pressure is thus set to 13 bar.

In order to avoid temperature chock when mixing water into the fuel in the homogeniser, the water inlet temperature is to be set to 70-90 °C.

Safety system

In case the pressure in the fuel oil line drops, the water homogenised into the Water In Fuel emulsion will evaporate, damaging the emulsion and creating supply problems. This situation is avoided by installing a third, air driven supply pump, which keeps the pressure as long as air is left in the tank ‘S’, see Fig. 7.06.01.

Before the tank ‘S’ is empty, an alarm is given and the drain valve is opened, which will drain off the WIF and replace it with HFO or diesel oil from the service tank.

The drain system is kept at atmospheric pressure, so the water will evaporate when the hot emulsion enters the safety tank. The safety tank shall be designed accordingly.

Impact on the auxiliary systems

Please note that if the engine operates on Water In Fuel emulsion (WIF), in order to reduce the NO_x emission, the exhaust gas temperature will decrease due to the reduced air / exhaust gas ratio and the increased specific heat of the exhaust gas.

Depending on the water content, this will have an impact on the calculation and design of the following items:

- Freshwater generators
- Energy for production of freshwater
- Jacket water system
- Waste heat recovery system
- Exhaust gas boiler
- Storage tank for freshwater

For further information about emulsification of water into the fuel and use of Water In Fuel emulsion (WIF), please refer to our publication titled:

Exhaust Gas Emission Control Today and Tomorrow

The publication is available at www.mandieselturbo.com under ‘Products’ → ‘Marine Engines & Systems’ → ‘Low Speed’ → ‘Technical Papers’.

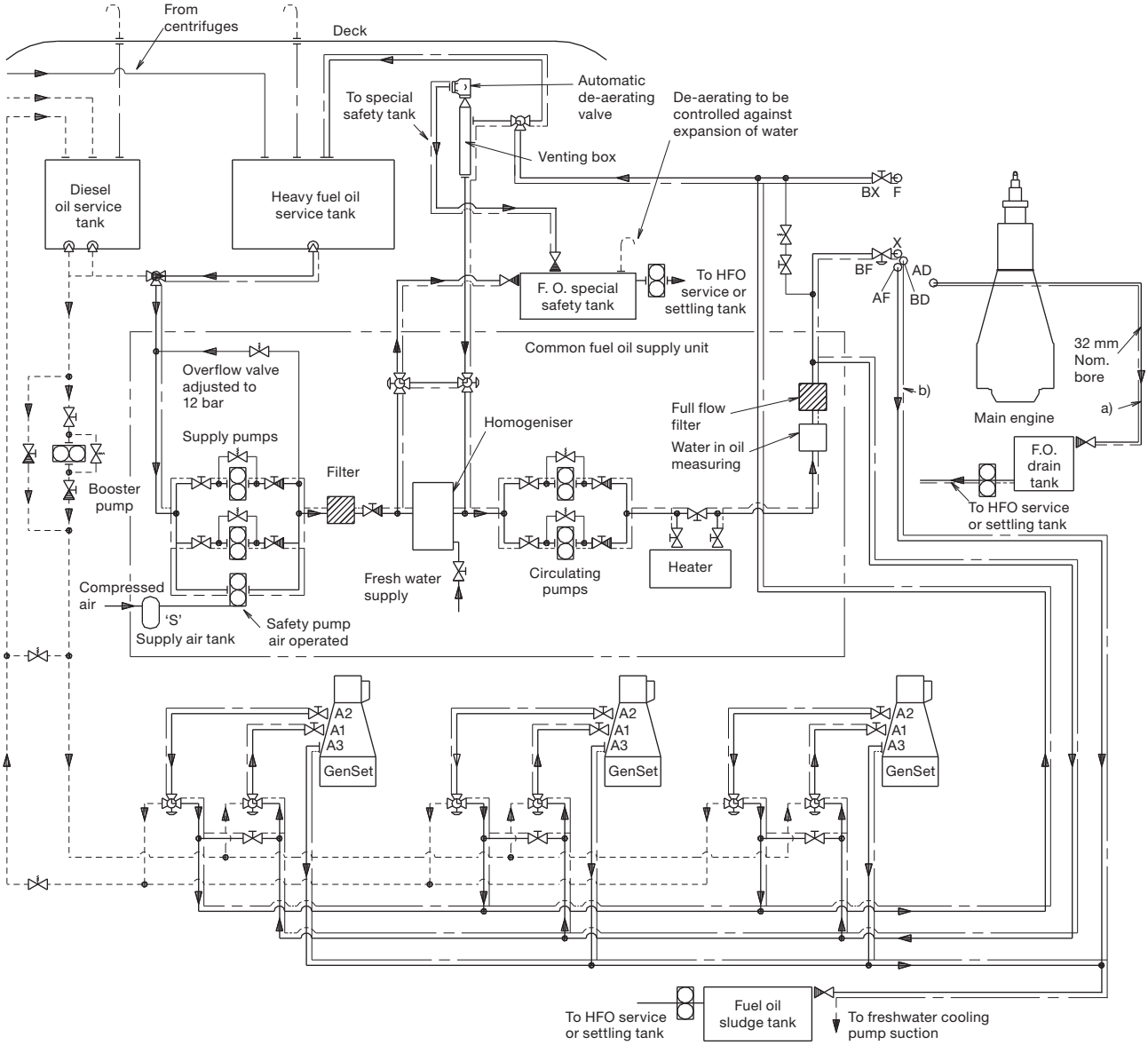

- - - - - - - - -	Diesel oil
————	Heavy fuel oil
═══	Heated pipe with insulation

Number of auxiliary engines, pumps, coolers, etc. are subject to alterations according to the actual plant specification.

a) Tracing fuel oil lines: Max. 150 °C
b) Tracing fuel oil drain lines: Max. 90 °C, min. 50 °C for installations with jacket cooling water

The letters refer to the list of 'Counterflanges'.

198 99 01-8.3

Fig. 7.06.01: System for emulsification of water into the fuel common to the main engine and MAN Diesel GenSets

Reliquefaction Technology

While reliquefaction is widely used in gas handling on land, it has been used on board ship so far only on LPG carriers.

Recently, the technology for reliquefying LNG on board ship has been matured and commercialised. The present analysis is based on the Moss Reliquefaction, sold worldwide by Hamworthy KSE.

The patented system (Moss RS) for reliquefying boil-off gas, establishes a solution for pumping LNG back to the tanks and selling more LNG to the buyers of gas.

The boil-off gas reliquefaction concept is based on a closed nitrogen cycle extracting heat from the boil-off gas. Several novel features such as separation and removal of incondensable components have resulted in a compact system with low power consumption.

The concept has the following technical merits:

- The nitrogen in the LNG boil-off gas (BOG) is not reliquefied; this results in reduced nitrogen in the tanks during the voyage, better control of tank pressure and lower power requirement for the RS system.
- The system uses only proven components with extensive references from air-separation and peak-shaving plants world-wide.
- The system is prefabricated on skids for easy installation and hook-up.
- The system has automatic capacity control.
- The system can be stopped when the cargo pumps are in operation. This eliminates the need for extra generator capacity.
- During ballast voyage, the cargo tank temperature can be maintained by spraying reliquefied LNG back into the cargo tanks.
- The system must be installed with 100% redundancy.
- No extra personnel are required for operation and maintenance.

The process can be described as follows:

The LNG boil-off is compressed by the low duty (LD) compressor (BOG compressor), and sent directly to the so-called cold box.

The cold box in which the boil-off is reliquefied is cooled by a closed refrigeration loop (Brayton cycle). Nitrogen is the working medium.

Boil-off cycle

The cargo cycle consists of an LD compressor, a plate-fin cryogenic exchanger, a separator and an LNG return pump. Boil-off is evacuated from the LNG tanks by means of a conventional centrifugal low duty compressor. The vapour is compressed to 4.5 bar and cooled at this pressure to approximately ÷160°C in a plate-fin cryogenic heat exchanger.

This ensures condensation of hydrocarbons to LNG. The fraction of nitrogen present in the boil-off that cannot be condensed at this condition remains as gas bubbles in the LNG. Phase separation takes place in the liquid separator.

From the separator, the LNG is dumped back to the storage tanks, while the nitrogenrich gas phase is discharged (to atmosphere or burnt in an oxidizer).

Nitrogen cycle

The cryogenic temperature inside the cold box is produced by means of a nitrogen compression-expansion cycle. Nitrogen gas at a pressure of 13.5 bar is compressed to 57 bar in a 3-stage centrifugal compressor.

The gas is cooled by water (seawater or indirect) after each stage. After the last cooler, the gas is led to the “warm” part of the cryogenic heat exchanger where it is pre-cooled to about ÷110°C and then expanded to a pressure of 14.5 bar in the expander. The gas leaves the expander at about ÷163°C and is then introduced into the ‘cold’ part of the cryogenic heat exchanger where it cools and reliquefies the boil-off gas to LNG.

The nitrogen then continues through the ‘warm’ part of the cryogenic heat exchanger before it is returned to the suction side of the 3-stage compressor.

The N2-compressor/expander unit is a 3-stage integrated gear centrifugal compressor with one expander stage.

The unit has a gear with 4 pinions where each of the 4 wheels is coupled to a separate pinion. The result is that the expander work goes directly into the gearbox and relieves the electric motor.

The advantages of this solution are:

- More compact design
- Reduced cost
- Improved control of the refrigeration
- Reduced power consumption.

Control systems

Generally, the temperature in the nitrogen loop decides the quantity of N_2 in the coolant circuit.

Increasing or decreasing the amount of nitrogen in the loop changes the cooling capacity. The amount is changed by injecting or withdrawing nitrogen from the receiver. If the cooling capacity is too high, the inlet expander temperature will decrease.

The control valve to the receiver at the compressors discharge will open to withdraw the nitrogen from the main loop. Correspondingly, if the cooling capacity is too low, the inlet expander temperature will increase. The control valve from the receiver to the compressor suction side will open to inject nitrogen into the main loop.

The relationship between cooling capacity and pressure changes is based on the fact that a turbo compressor is a constant volume flow machine. When the suction pressure is changing, the mass flow is changing and, correspondingly, the cooling capacity. The pressure ratio for the compressor is constant and independent of the suction pressur e. Even if the cooling capacity is reduced, the outlet expander temperature will be nearly the same.

The BOG cycle is an independent loop. The cargo tank pressure is kept approximately constant by varying the mass flow through the compressor. The boil-off compressor will be a two-stage centrifugal compressor with diffuser guide vanes (DGV) for controlling the capacity. There is DGV on both stages, and they work in parallel, controlled by the same signal.

LNG Carriers

LNG carriers, like oil tankers, are not permitted to immobilize their propulsion machinery while in port and port areas. Hence, redundancy is required.

For the steam ship, redundancy is considered fulfilled by having two boilers, whereas no redundancy is required for the single steam turbine, propeller shaft and propeller.

For diesel engines, which require more maintenance on a routine basis than steam turbines, either a multi-engine configuration or an alternative propulsion power supply possibility for a single engine configuration is required.

Shuttle tankers in the North Sea are equipped with twin low speed engines and twin propellers. This ensured that approximately half of the propulsion power always is available, and that one of the diesel engines can be maintained without immobilising the vessel or compromising safety. A similar solution or alternatively a single diesel engine with a shaft electrical motor will fulfil requirements concerning mobilation for LNG cerriers.

The International Association of (marine) Classification Societies' (IACS) redundancy considerations for a reliquefaction plant for LNG carriers are:

Assumptions:
Dual fuel or heavy burning diesel engines as propulsion engines

Reliquefaction plant installed for gas recevering pressure and temperature control

IACS Rules for Redundancy for Reliquefaction Plant:

Alt. 1: A spare capacity at least equal to the largest single reliquefaction unit should be fitted.

Alt. 2: Auxiliary boiler(s) capable of burning the boil-off vapours and disposing of the generated steam via a steam dumping system

Alt. 3: Gas Oxidiser, i.e. burning the boil-off gas in a separate burner unit positioned in the vessel's stack

Alt. 4: Controlled venting to the atmosphere of cargo vapours, if permitted by the authorities in question

With the ME-GI/ME-C-GI engine, the configuration shown in Fig. 7.08.01, comprising one reliquefaction unit, one high pressure compressor and one oxidizer, will comply with redundancy requirements and offer full fuel flexibility.

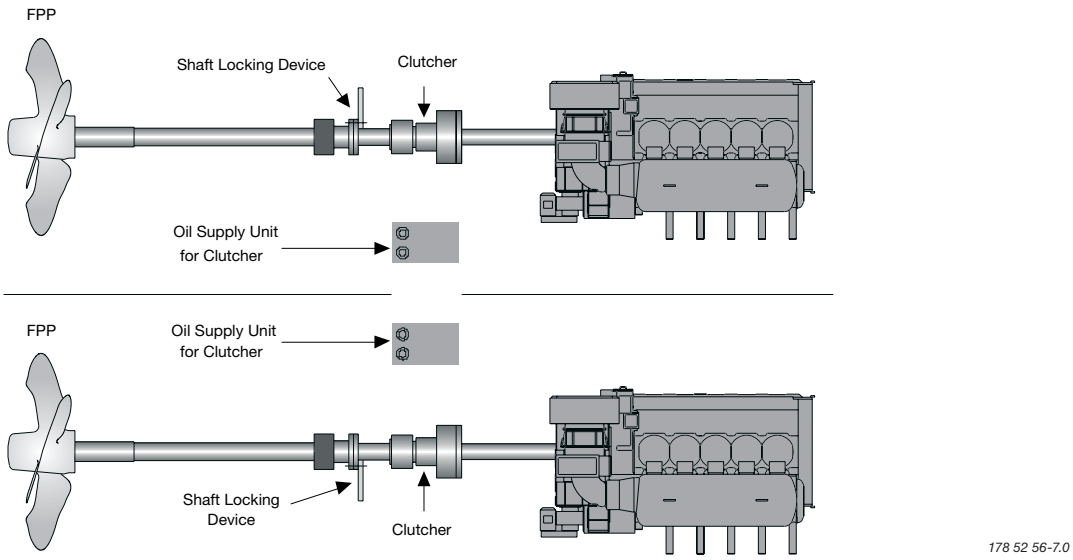

Fig. 7.08.01: Twin-engine configuration

Redundant low speed engine propulsion concepts, as outlined above, ensure that sufficient power is available for safe navigation and, for the twin engine concept with completely separated engine rooms, even an additional margin towards any damage is obtained.

For LNG carriers, a twin engine configura-tion is proposed to alleviate any possible doubt on reliability and redundancy.

The twin-engine configuration is shown in Fig. 7.08.01.

The average lifetime of commercial vessels is 25 years, by which time the vessels are usually scrap-ped for reasons of economy. Diesel engines could operate for decades beyond, as all wear parts are replaceable. Long living diesels are seen mainly in power plants. The low speed diesel engine has a long lifetime which also makes it relevant for LNG carriers with a lifetime of up to 40 years.

The latest series of electronically controlled engines, the ME series, are particularly suitable for the trade discussed, as the control system software can be updated routinely.

Maintenance requirements for diesels are predictable, and parts supplies over the engine lifetime are guaranteed by the manufacturer and designer.

Vibration levels are fully predictable and controllable, both for vessels with spherical tanks and membrane tank systems.

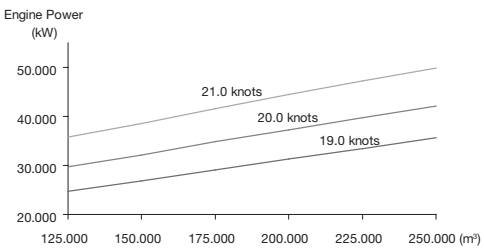

178 52 57-9.1

Fig. 7.08.02: Typical propulsion power requirements for LNG carriers

Furthermore, the segregation of the gas cargo and heavy fuel for propulsion ensured with reliquefaction means that handling of gas in the engine room and surrounding areas is avoided.

Based on the technology described in the foregoing, the machinery to replace the steam turbine and boilers in a typical 145,000 m^3 LNG carrier is therefore *2 x* approx. 20,000 hp low speed fuel burning ME/ME-C or -GI type diesel engines.

Typical propulsion power requirements for LNG carriers of different sizes are shown in Fig. 7.08.02.

The bridge and engine room control system shall be able to handle operation with both one (emergency) and two engines.

The bridge and engine room control system shall, in the case of operation on two engines, be able to handle both individual control and simultaneous control of the engines.

Simultaneous control consists of equality in power distribution, order for reversing, start of engines and stop of engines.

The control system shall, in case of failure on one of the engines, be able to ensure continuous operation with only one engine without jeopardizing manoeuvrability or safety of the ship or engines.

In the case of FP propellers, it is presumed that, the shaft is declutched from the engines and the propeller wind- milling, alternatively that a shaft brake is applied.

In the case of CP propellers, it is presumed that the propeller is at zero pitch and the shaft brake is active. If engine overhaul is to take place during sailing, declutching is necessary.

In the case of a FP propelleer the working engine will have to accept a ‘heavy propeller’, i. e. higher torque, as shown in Fig. 7.08.03, which basically calls for a changed engine timing.

With the ME engine concept, this can be done by push button only, activating ‘single engine running mode’.

This can be pre-programmed into the software just as the so-called ‘economy mode’ and ‘low NO_x mode’. Hence, the operating engine of will be readily optimised for the purpose, and full mobility of the vessel ensured.

As per calculation, a speed of 75% of the design speed of the vessel can be obtained with a single engine in operation.

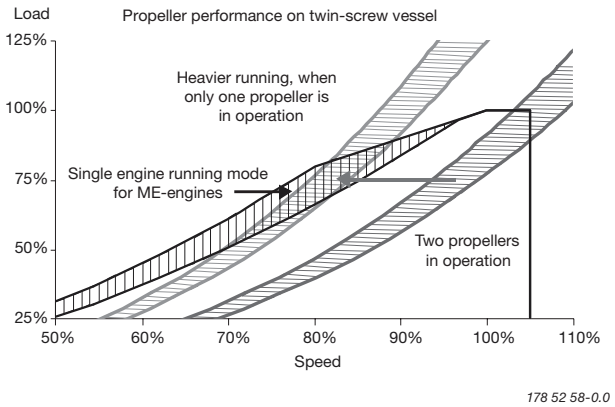

Fig. 7.08.03: Propeller curves in load diagram with one vs. two propellers working

Gas Compressor System

The gas supply system is based on Flotech™ packaged compressors:

- Low-pressure GE Oil & Gas RoFlo™ type gas compressors with lubricated vanes and oil buffered mechanical seals, which compress the cold boil-off gas from the LNG tanks at the temperature of –140 °C to –160 °C. The boil-off gas pressure in the LNG tanks should normally be kept between 1.06-1.20 bar(a). Under normal running conditions, cooling is not necessary, but during start up, the temperature of the boil-off gas may have risen to atmospheric temperature, hence pre-heating and after-cooling is included, to ensure stabilisation of the cold inlet and intermediate gas. temperature

- The high-pressure GE Oil & Gas Nuovo Pignone™ SHMB type gas compressor; 4 throw, 4-stage horizontally opposed and fully balanced crosshead type with pressure lubricated and water-cooled cylinders & packings, compresses the gas to approximately 250-300 bar, which is the pressure required at the engine inlet at full load. Only reciprocating piston compressors are suitable for this high-pressure duty; however the unique GE fully balanced frame layout addres-ses concerns about transmitted vibrations and also eliminates the need for heavy installation structure, as is required with vertical or V-form unbalanced compressor designs. The discharge temperature is kept at approx. 45 °C by the coolers.

- Buffer tank/accumulators are installed to provide smoothing of minor gas pressure fluctuations in the fuel supply; ± 2 bar is required.

- Gas inlet filter/separator with strainer for protection against debris.

- Discharge separator after the final stage gas cooler for oil/condensate removal.

- Compressor capacity control system ensures that the required gas pressure is in accordance with the engine load, and that the boil-off gas amount is regulated for cargo tank pressure control (as described later).

- The compressor safety system handles normal start/stop, shutdown and emergency shutdown commands. The compressor unit includes a process monitoring and fault indication system. The compressor control system exchanges signals with the ME-GI/ME-C-GI control system.

- The compressor system evaluates the amount of available BOG and reports to the ME-GI/ME-C-GI control system.

Redundancy for the gas supply system is a very important issue. Redundancy in an extreme sense means two of all components, but the costs are heavy and a lot of space is required on board the ship. We have worked out a recommendation that reduces the costs and the requirement for space while ensuring a fully operational ME-GI/ME-C-GI engine. The dual fuel engine concept, in its nature, includes redundancy. If the gas supply system falls out, the engine will run on heavy fuel oil only.

The gas supply system illustrated in Figs. 7.09.01 and 7.09.02 are based on a 210,000 M3 LNG carrier, a boil off rate of 0.12 and equipped with 2 dual fuel engines: 2 x 7S65ME-C-GI. For other sizes of LNG carriers the setup will be the same but the % will be changed. Fig. 7.09.03 shows the compressor system in more detail.

Both systems comprise a double (2 x 100%) set of Low Pressure compressors each with the capacity to handle 100% of the natural BOG if one falls out (alternatively 3 x 50% may be chosen). Each of these LP compressors can individually feed both the High Pressure Compressor and the Gas Combustion Unit. All compressors can run simultaneously, which can be utilised when the engine is fed with both natural - and forced BOG.

The HP compressor section is chosen to be a single unit. If this unit falls out then the ME-GI/ME-C-GI engine can run on Heavy Fuel Oil, and one of the LP compressors can feed the GCU.

Typical availability of these electrically driven Flotech / GE Oil & Gas compressors on natural gas (LNG) service is 98%, consequently, an extra HP compressor is a high cost to add for the 2% extra availability.

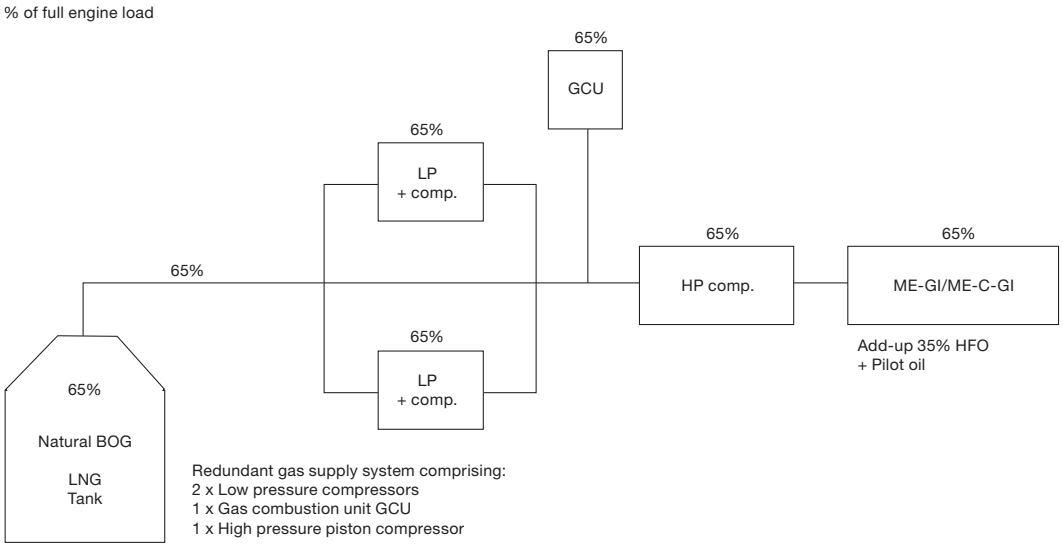

178 53 67-0.1

Fig. 7.09.01: Gas supply system - natural BOG only

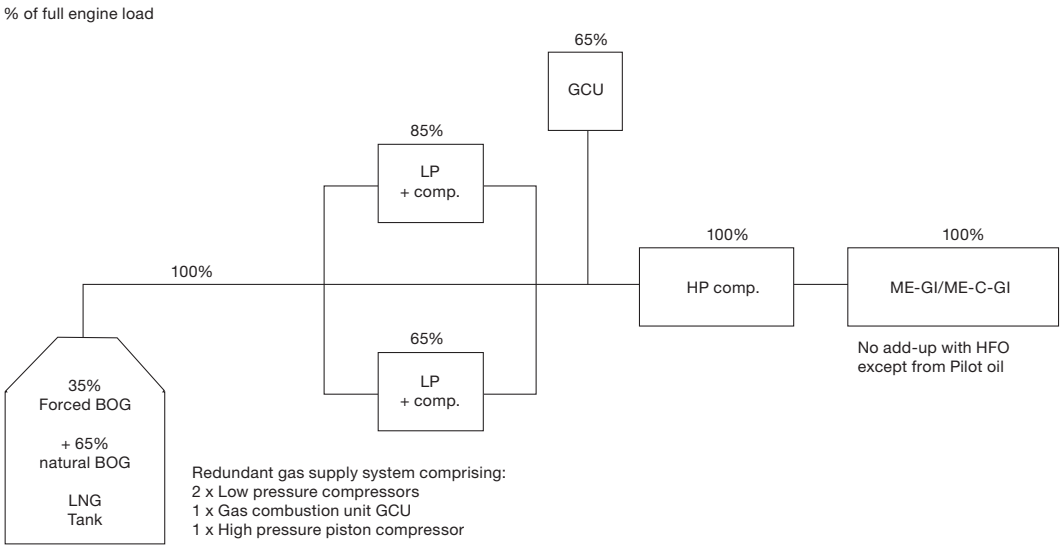

178 53 68-2.1

Fig. 7.09.02: Gas supply system - natural and forced BOG

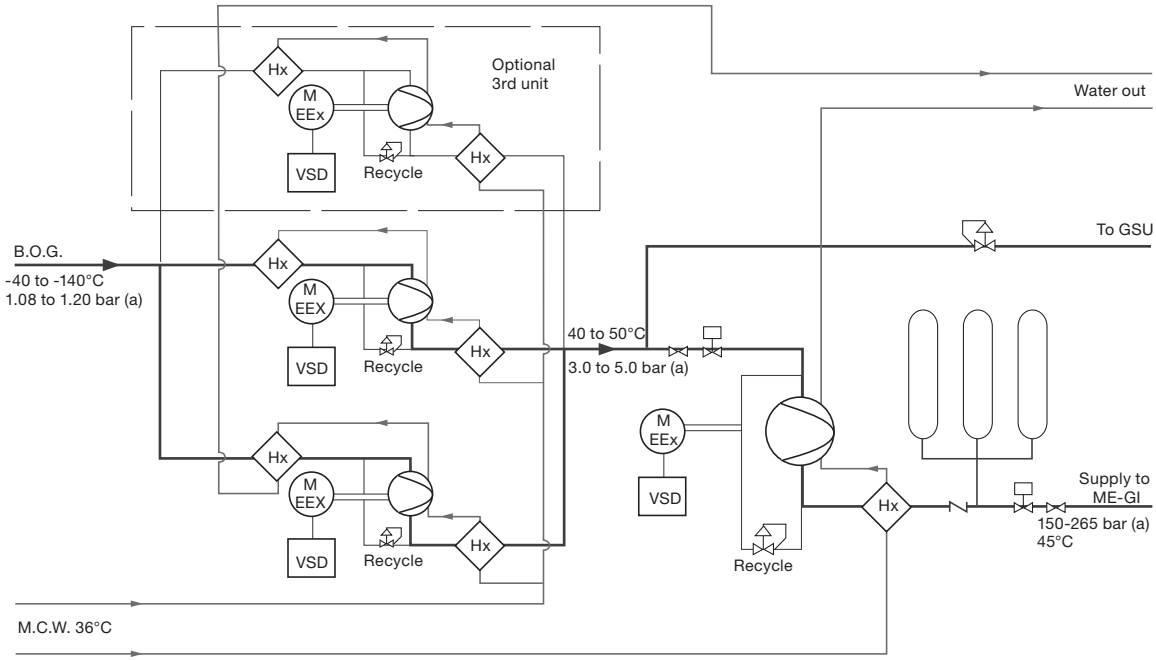

178 53 69-4.0

Fig. 7.09.03: Gas compressor system - indicating capacity control and cooling systems

Gas supply system - capacity management

The minimum requirement for the regulation of supply to the ME-GI/ME-C-GI engine is a turn-down ratio of 3.33 which equals a regulation down to 30% of the maximum flow (For a twin engine system, the TR is 6.66). Alternatively in accordance with the requirements of the ship owners

Both the LP and HP compressor packages have 0 => 100% capacity variation systems, which allows enormous flexibility and control.

Stable control of cargo tank pressure is the primary function of the LP compressor control system. Dynamic capacity variation is achieved by a combination of compressor speed variation and gas discharge to recycle. The system is responsible for maintaining the BOG pressure set tank pressure point within the range of 1,06 - 1,20 bar(a) through 0 => 100% compressor capacity.

At full load of the ME-GI/ME-C-GI engine on gas, the HP compressor delivers approximately 265 bar whereas at 50% load, the pressure is reduced to 130-180 bar. The discharge pressure set points are controlled within ±5%. Compressor speed variation controls the capacity range of approximately 100 => 50% of volumetric flow. Speed control is the primary variation; speed control logic is integrated with recycle to reduce speed/capacity when the system is recycling under standby (0% capacity) or part load conditions.

LP & HP compressor systems are coordinated such that BOG pressure is safely controlled, whilst however delivering all available gas at the correct pressure to the ME-GI/ME-C-GI engine. Load and availability signals are exchanged between compressor and engine control systems for this purpose.

Safety aspects

The compressors are delivered generally in accordance with the API-11P standard (skid-packaged compressors) and are designed and certified in accordance with relevant classification society rules.

Maintenance

The gas compressor system needs an annual overhaul. The overhaul can be performed by the same engineers who do the maintenance on the main engines. It requires no special skills apart from what is common knowledge for an engineer.

External systems

External safety systems should include a gas analyser for checking the hydrocarbon content of the air, inside the compressor room and fire warning and protection systems.

Safety devices - Internal systems

The compressors are protected by a series of Pressure High, Pressure Low, Temperature High, Vibration High, Liquid Level High/Low,

Compressor RPM High/Low and Oil Low Flow trips, which will automatically shut down the compressor if fault conditions are detected by the local control system.

Pressure safety valves vented to a safe area guard against uncontrolled over-pressure of the fuel gas supply system.

Inert gas system

After running in the gas mode, the gas system on the engine should be emptied of gas by purging the gas system with inert gas (N_2, CO_2),

Core Compressor Unit

The core unit is a GE-Flotech high-pressure fuel gas compressor package, which consists of an electric motor directly coupled to a four-stage gas compressor, model F604, complete with relevant control, cooling, filtering and lubricating systems. The power consumption of the compressor is max. 3,580 kW.

The compressor is balanced therefore giving little or no vibrations and is therefore ideal for off shore installations.

Main Drive System

The main drive system consists of an electric motor, flywheel and a torsionally rigid, flexible drive coupling. The drive speed is controlled by an electronic variable speed drive (VSD).

Cooling System

The cooling system cools the compressed gas after each compressor stage and stabilises the temperature of the recycle gas. The compressor frame lubricating oil is air-cooled. The cooling system is a closed circuit, with the cooling water circulated by an electrically driven pump through a radiator and a gas to water heat exchanger.

Inlet Filtration

Inlet filtration is included to remove particulate matter and entrained liquids from the gas stream. Filtration is done in two stages comprising a pre-filter followed by a coalescing filter. The inlet pre-filter includes a vane-pack, to remove free liquids, and a particle filter. The coalescing filter precipitates and removes aerosols and liquids not already removed by the inlet pre-filter.

Inlet Flow Meter

A flow meter is installed to measure the net inlet gas flow. It is installed between the inlet pre-filter and the coalescing filter.

High Pressure Gas Buffer System

The high-pressure gas buffer consists of three pressure vessels connected between the compressor discharge and the engine gas delivery system. Their purpose is to provide smoothing of minor gas pressure fluctuations in the fuel gas supply, because of the engine's demand for low variations in fuel gas supply pressure.

Thus, the high-pressure gas from the compressor package, is delivered at a steady flow to the MAN B&W gas injection system.

Control System

A Compressor Package Controller (CPC) carries out operational control of the Flotech package.

The CPC consists of a Programmable Logic Controller (PLC), Unit Process Controller (UPC) and an Operator Panel (OP), and is located separately from the compressor package skid.

Normal start/stop operation, safety protection, process monitoring and fault annunciation of the compressor package is carried out by the PLC. Both normal and out-of-limit conditions are observed by the PLC. Out-of-limit conditions will cause the PLC to activate either an alarm or a compressor package shutdown (trip).

An Operator Panel (OP) in the control cabinet door displays the current operating status of the PLC and allows the operator to view process readings, alarm and trip set-points, and to reset plant trips. The compressor is protected by a series of Pressure High, Pressure Low, Temperature High, Vibration High, Liquid Level High/Low, Compressor RPM High/Low and Oil Low Flow trips, which will automatically shut down the compressor if fault conditions are detected by the local control system.

A Unit Process Controller (UPC) regulates the dynamic capacity control of the compressor by varying compressor speed, inlet gas pressure and recycle valve position. The capacity control can be varied in the range of 0-100 %, while maximising energy savings by the use of gas recycling and inlet gas pressure throttling control.

Gas Blow-down and Recovery System

The gas blow-down and recovery system consists of a gas storage volume with pressure vessels connected together in a battery to form a high volume buffer. It is designed to minimise the release of gas to atmosphere in the event of a compressor package shutdown or a requirement to de-pressurise the engine supply lines. On compressor start, the gas previously recovered and stored in the blow-down system is re-consumed by the compressor. The PLC optimises the use of this gas storage volume and prevents over-pressuring of the gas supply line by control of the package inlet valve. The package inlet valve has an adjustable slow-opening function; this valve is opened after start up by the compressor, when the blow-down system has been evacuated to a preset pressure.

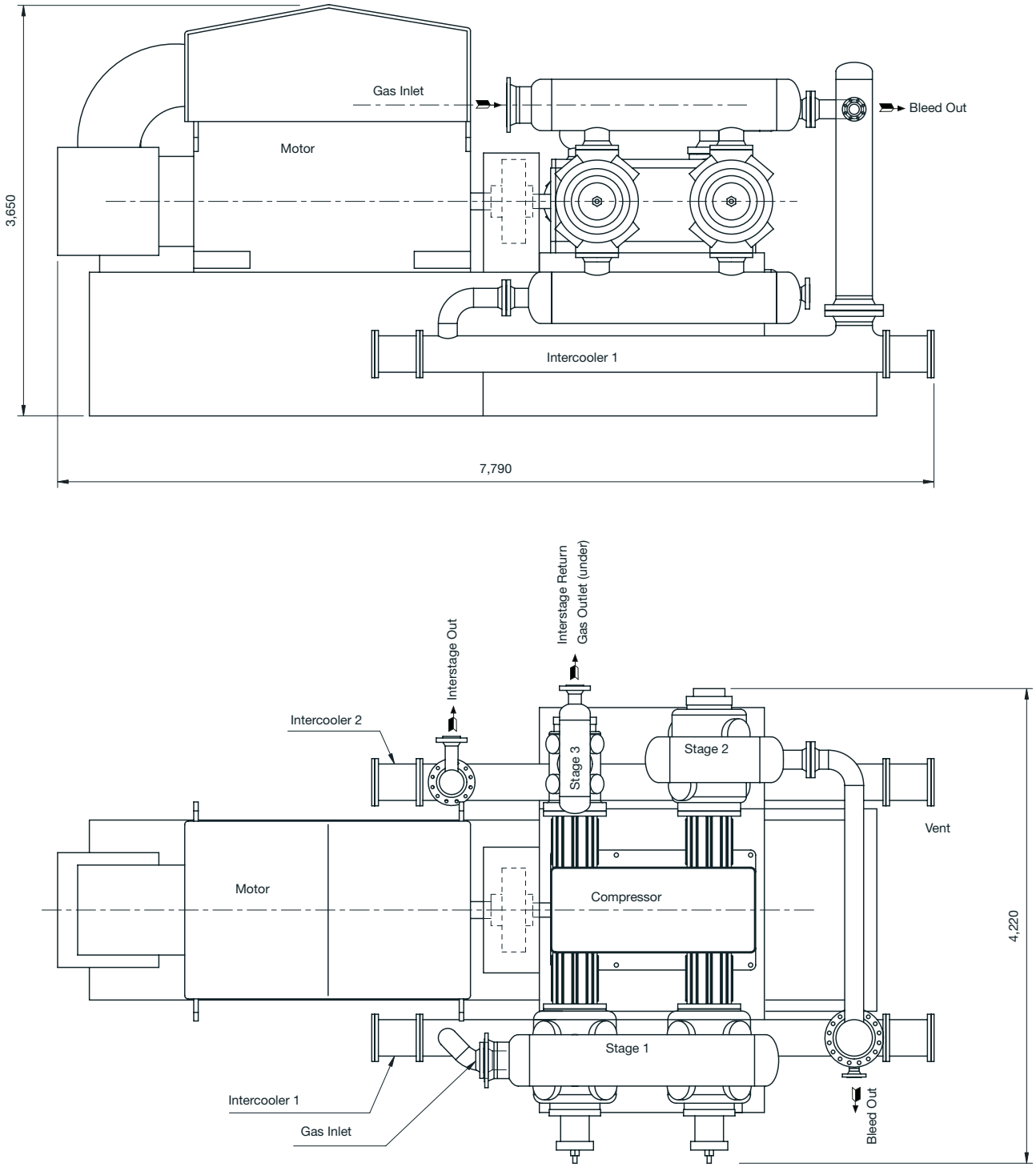

Fig. 7.09.04: High-Pressure compressor package providing boil-off gas (BOG) to the ME-GI/ME-C-GI engines

Low-duty Compressor

The Low-duty Compressor consists of a single stage compressor with a heavy-duty wheel in forged aluminium alloy with adjustable inlet guide vanes, mounted to a heavy-duty speed-increasing gearbox.

Together with the complete lube oil and seal gas system the compressor is installed on a rigid single skid for shipboard application, with bulkhead and bulkhead seal mounted to the gearbox.

An intrinsically safe local control panel with gauge board is installed on the skid, and a remote control cabinet is supplied loose for installation in the safe area.

To cover the wide temperature range of natural boil-off gas (-140 °C) and forced gas (-40 °C), the low-duty compressor is normally driven by a variable speed motor.

Forcing Vaporiser

The Forcing Vaporiser is typically installed upstream of the L/D Compressors with a Mist Separator at the mixing point with the natural boil-off.

To avoid thermal stress, the proven Shell and U-tube design is applied, directly heated by saturated steam. The equipment consists of a single-pass shell with stationary head, fully welded to the U-tube bundle, and is entirely fabricated from stainless steel.

For a reliable temperature control, a Spray Pipe with integrated Spray Nozzle supplements the vaporiser for efficient mixing of bypassed LNG with the overheated gas.

Mist Separator

If forced gas is added to the natural boil-off gas from the tank, two gases with different gas compositions, and temperatures are mixed. In a large mixing range, mist is created at the mixing point, from two essentially dry gases.

The vertical separator vessel, with two inlet nozzles (from the gas header and Forcing Vaporiser) and one outlet nozzle (to the L/D Compressors), eliminates more than 99.5% of any mist. A drain connection and a level switch are included.

The Mist Separator is entirely fabricated from stainless steel.

Boil-off Heaters

One small Low-duty or Boil-off Heater is installed.

To avoid thermal stress, the proven Shell and U-tube design is applied, directly heated by saturated steam. The equipment consists of a single-pass shell with stationary head, fully welded to the U-tube bundle, and is entirely fabricated from stainless steel.

Alternative suppliers

A number of companies can supply compressors that can fulfil the requirement for application in connection with an ME-GI/ME-C-GI engine on an LNG carrier. We have been in contact with a few, viz.:

Burckhardt	- Switzerland
Tomasson	- Japan (Licensee) (used in Japan 12K80MC-GI-S)
GE-Flotech	- USA – Sweden
(Nuovo Pignone	- Italia (used in MBD four-stroke power station)
Air Liquide	- France

Lubricating Oil

8

Lubricating and Cooling Oil System

The lubricating oil is pumped from a bottom tank by means of the main lubricating oil pump to the lubricating oil cooler, a thermostatic valve and, through a full-flow filter, to the engine inlet RU, Fig. 8.01.01.

RU lubricates main bearings, thrust bearing, axial vibration damper, piston cooling, crosshead bearings, crankpin bearings. It also supplies oil to the Hydraulic Power Supply unit and to moment compensator and torsional vibration damper.

From the engine, the oil collects in the oil pan, from where it is drained off to the bottom tank, see Fig. 8.06.01a and b 'Lubricating oil tank, with cofferdam'. By class demand, a cofferdam must be placed underneath the lubricating oil tank.

The engine crankcase is vented through 'AR' by a pipe which extends directly to the deck. This pipe has a drain arrangement so that oil condensed in the pipe can be led to a drain tank, see details in Fig. 8.07.01.

Drains from the engine bedplate 'AE' are fitted on both sides, see Fig. 8.07.02 'Bedplate drain pipes'.

For external pipe connections, we prescribe a maximum oil velocity of 1.8 m/s.

Lubrication of turbochargers

Turbochargers with slide bearings are normally lubricated from the main engine system. AB is outlet from the turbocharger, see Figs. 8.03.01 to 8.03.04, which are shown with sensors for UMS.

Figs. 8.03.01 to 8.03.04 show the lube oil pipe arrangements for different turbocharger makes.

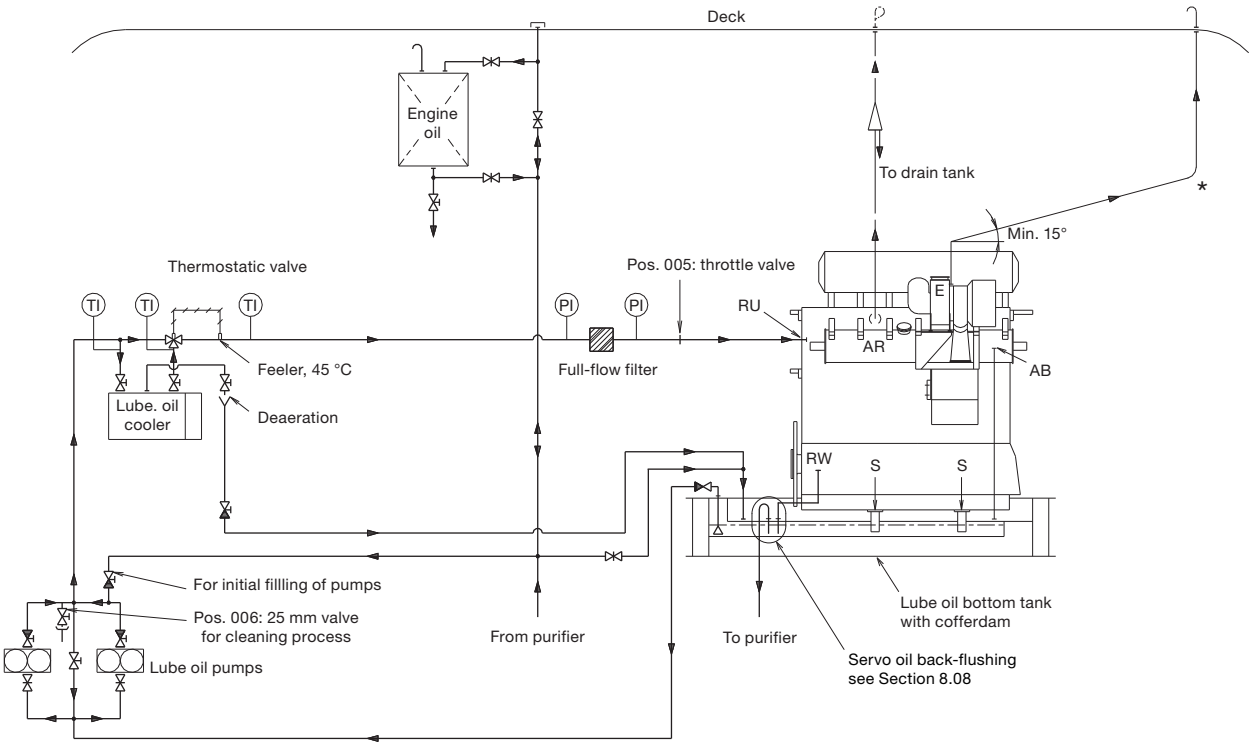

The letters refer to list of 'Counterflanges'
* Venting for MAN Diesel or Mitsubishi turbochargers only

198 99 84-4.5

Fig. 8.01.01 Lubricating and cooling oil system

Hydraulic Power Supply Unit

Internally on the engine RU is connected to the Hydraulic Power Supply unit (HPS) which supplies the hydraulic oil to the Hydraulic Cylinder Units (HCUs). The HPS unit can be either mounted onto the engine and engine driven (EoD 4 40 160) or delivered separately electrically driven, option 4 40 660. See figs. 16.01.02 and 16.01.03 respectively.

The hydraulic power supply unit shown in Fig. 8.02.01, consists of:

- an automatic main filter with a redundance filter, in parallel
- two electrically driven pumps
- three engine driven pumps
- an safety and accumulator block

RW is the oil outlet from the automatic backflushing filter.

At start one of the two electrically driven start-up pumps is activated, and it is stopped as soon as the three engine driven pumps have taken over the hydraulic oil supply.

The hydraulic oil is supplied to the Hydraulic Cylinder Units (HCU) located at each cylinder, where it is diverted to the electronic Fuel Injection system, and to the electronic exhaust Valve Activation (FIVA) sy-stem, which perform the fuel injection and opens the exhaust valve. The exhaust valve is closed by the conventional ‘air spring’.

The electronic signals to the FIVA valves are given by the Engine Control System, see Chapter 16, Engine Control System (ECS).

The Hydraulic power supply is available in 2 versions

The standard version, EoD 4 40 660, is the classic ME power supply where the hydraulic power is generated by engine driven pumps and start up pressure is created by electric driven start pumps. The capacity of the start up pumps is only sufficient to make the start up pressure. The engine can not run with the engine driven pumps out of operation.

The optional version, EoD 4 40 661 is similar to the standard version, but the electric driven start up pumps have a capacity sufficient to give Take Home power at least 15% engine power. The electric power consumption should be taken into consideration in the specification of the auxilliary machinery capacity.

Hydraulic power supply unit, Engine Driven

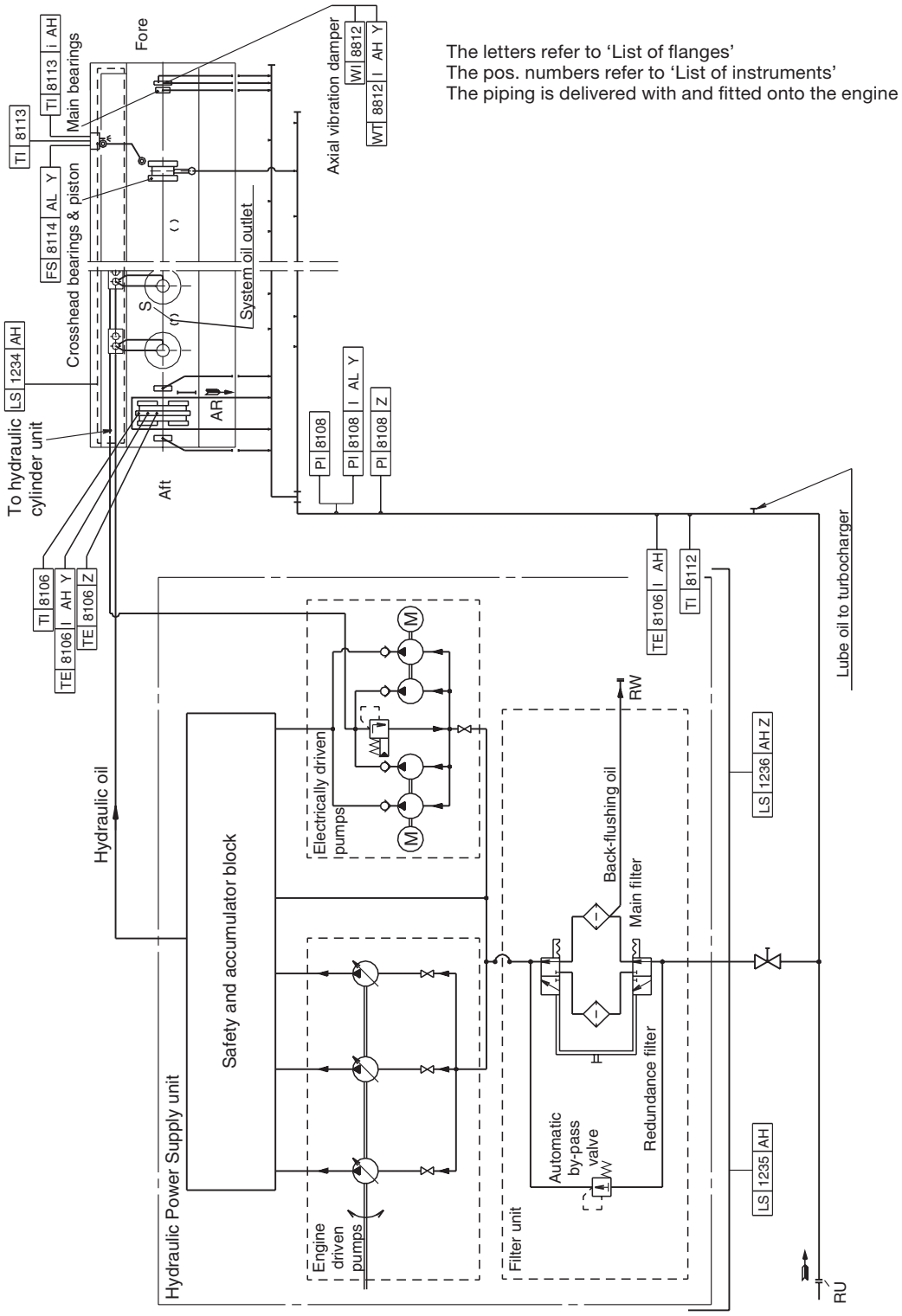

Fig. 8.02.01: Engine driven hydraulic power supply unit

Lubricating Oil Pipes for Turbochargers

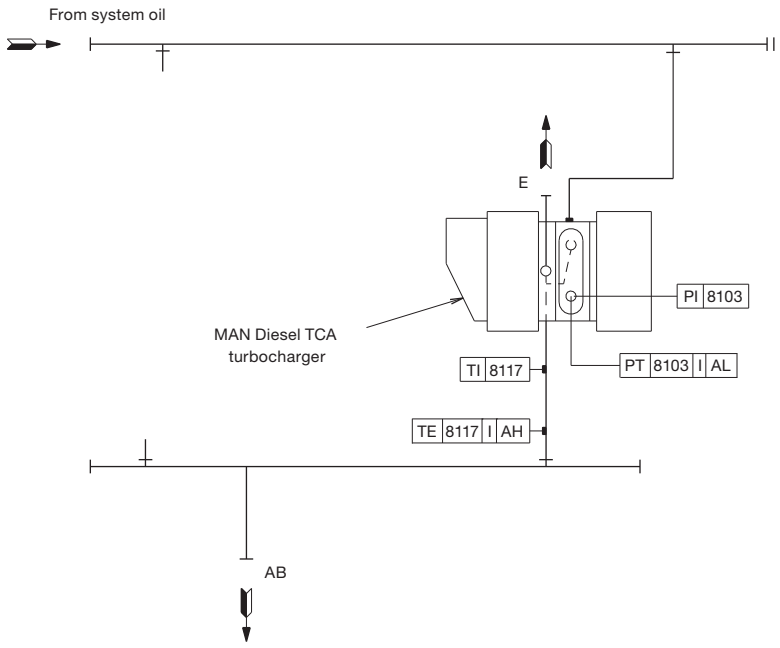

121 14 96-6.1.0

Fig. 8.03.01: MAN Diesel turbocharger type TCA

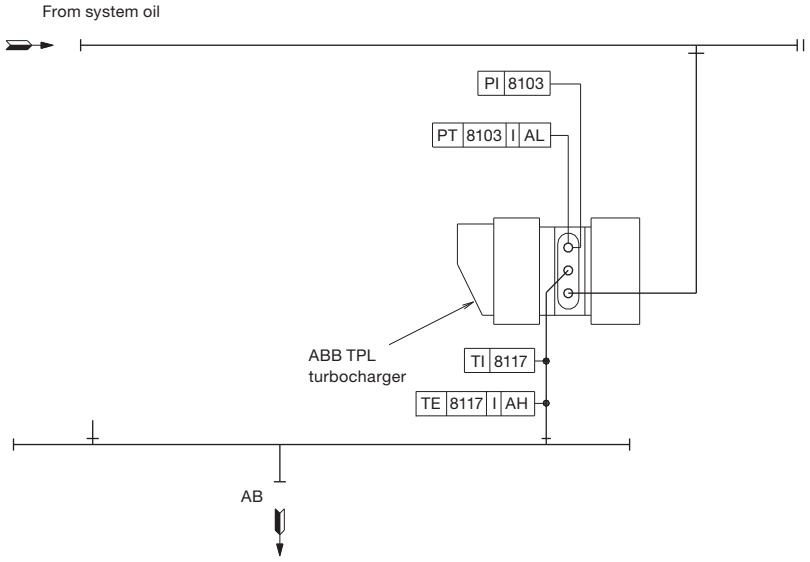

126 40 85-8.3.0

Fig. 8.03.02: ABB turbocharger type TPL

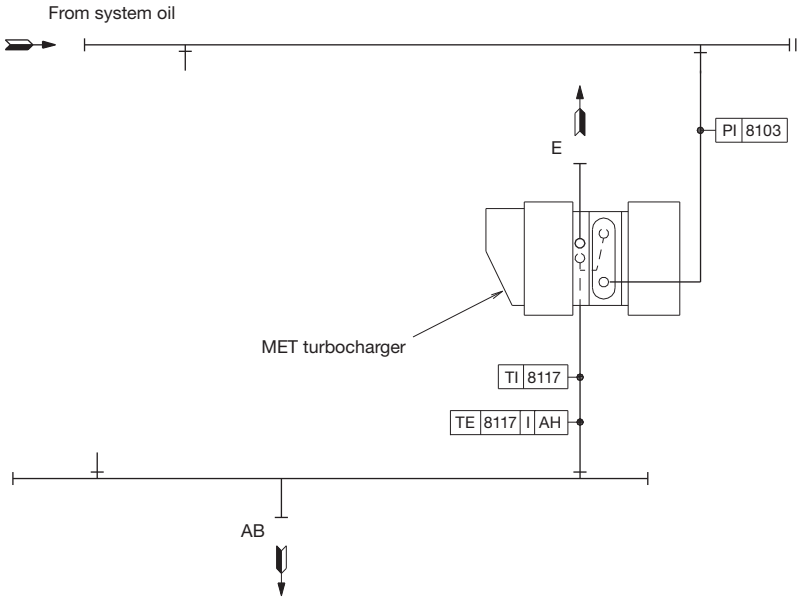

126 40 87-1.2.0

Fig. 8.03.03: Mitsubishi turbocharger type MET

Lubricating Oil Centrifuges and List of Lubricating Oils

For Unattended Machinery Spaces (UMS), automatic centrifuges with total discharge or partial discharge are to be used. Manual cleaning centrifuges can only be used for Attended Machinery Spaces (AMS).

The nominal capacity of the centrifuge is to be according to the supplier's recommendation for lubricating oil, based on the figure:

0.136 litre/kWh

The Nominal MCR is used as the total installed power.

List of lubricating oils

The circulating oil (lubricating and cooling oil) must be of the rust and oxidation inhibited type of oil of SAE 30 viscosity grade.

In order to keep the crankcase and piston cooling spaces clean of deposits, the oil should have adequate dispersion and detergent properties.

Alkaline circulating oils are generally superior in this respect.

The oils listed below have all given long-term satisfactory service in MAN B&W engine installations:

Company	Circulating oil SAE 30, BN 5-10
BP	Energol OE-HT 30
Castrol	CDX 30
Chevron *)	Veritas 800 Marine 30
ExxonMobil	Mobilgard 300
Shell	Melina 30 / S 30
Total	Atlanta Marine D 3005
*) Includes Caltex, Chevron and Texaco	

Also other brands have been used with satisfactory results.

Components for Lubricating Oil System

Lubricating oil full flow filter

Lubricating oil flow ..... see 'List of capacities'
Test pressure.....according to class rules
Working temperature ..... approximately 45 °C
Oil viscosity at working temp..... 90 - 100 cSt
Pressure drop with clean filter ....maximum 0.2 bar
Filter to be cleaned
at a pressure drop.....maximum 0.5 bar

The filter working pressure and absolute fineness is to be found in the Project Guide for the specific engine.

Note:
85-90% of all particles bigger than 25 μm are retained in surface filter with a filter fineness of 40 μm absolute, and 35 μm for 50 μm.

The flow capacity must be within a range from 100 to 112% of the capacity stated.

The full flow filter should be located as close as possible to the main engine.

If a double filter (duplex) is installed, it should have sufficient capacity to allow the specified full amount of oil to flow through each side of the filter at a given working temperature with a pressure drop across the filter of maximum 0.2 bar (clean filter).

If a filter with a back-flushing arrangement is installed, the following should be noted:

- The required oil flow, specified in the 'List of capacities', should be increased by the amount of oil used for the back-flushing, so that the lubricating oil pressure at the inlet to the main engine can be maintained during cleaning.

- If an automatically cleaned filter is installed, it should be noted that in order to activate the cleaning process, certain makes of filter require a higher oil pressure at the inlet to the filter than the pump pressure specified. Therefore, the pump capacity should be adequate for this purpose, too.

Flushing of lubricating oil system

Before starting the engine for the first time, the lubricating oil system on board has to be cleaned in accordance with MAN Diesel's recommendations: 'Flushing of Main Lubricating Oil System', which is available on request.

Lubricating Oil Tank

Please note that the information is to be found in the Project Guide for the relevant engine type.

Crankcase Venting and Bedplate Drain Pipes

Please note that the information is to be found in the Project Guide for the relevant engine type.

Hydraulic Oil Back-flushing

The special suction arrangement for purifier suction in connection with the ME engine (Integrated system).

The back-flushing oil from the self cleaning 6 µm hydraulic control oil filter unit built onto the engine is contaminated and it is therefore not expedient to lead it directly into the lubricating oil sump tank.

The amount of back-flushed oil is large, and it is considered to be too expensive to discard it. Therefore, we suggest that the lubricating oil sump tank is modified for the ME engines in order not to have this contaminated lubricating hydraulic control oil mixed up in the total amount of lubricating oil. The lubricating oil sump tank is designed with a small 'back-flushing hydraulic control oil drain tank' to which the back-flushed hydraulic control oil is led and from which the lubricating oil purifier can also suck.

This is explained in detail below and the principle is shown in Fig. 8.08.01. Three suggestions for the arrangement of the drain tank in the sump tank are shown in Fig. 8.08.02 illustrates another suggestion for a back-flushing oil drain tank.

The special suction arrangement for the purifier is consisting of two connected tanks (lubricating oil sump tank and back-flushing oil drain tank) and of this reason the oil level will be the same in both tanks, as explained in detail below.

The oil level in the two tanks will be equalizing through the 'branch pipe to back-flushing oil drain tank', see Fig. 8.08.01. As the pipes have the same diameters but a different length, the resistance is larger in the 'branch pipe to back-flushing oil drain tank', and therefore the purifier will suck primarily from the sump tank.

The oil level in the sump tank and the back-flushing oil drain tank will remain to be about equal because the tanks are interconnected at the top.

When hydraulic control oil is back-flushed from the filter, it will give a higher oil level in the back-flushing hydraulic control oil drain tank and the purifier will suck from this tank until the oil level is the same in both tanks. After that, the purifier will suck from the sump tank, as mentioned above.

This special arrangement for purifier suction will ensure that a good cleaning effect on the lubrication oil is obtained.

If found profitable the back-flushed lubricating oil from the main lubricating oil filter (normally a 50 or 40 µm filter) can also be returned into the special back-flushing oil drain tank.

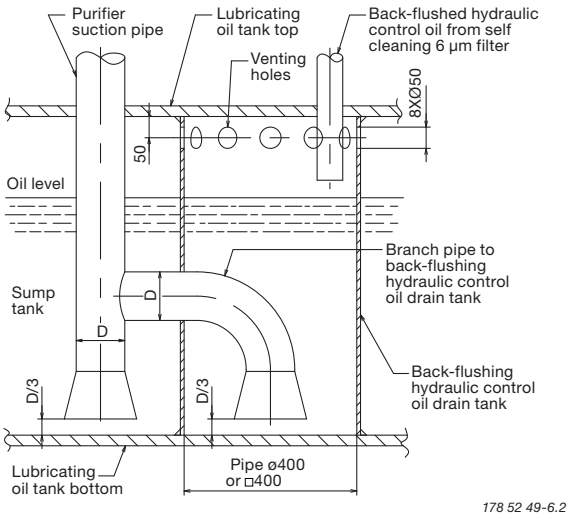

Fig. 8.08.01: Back-flushing servo oil drain tank

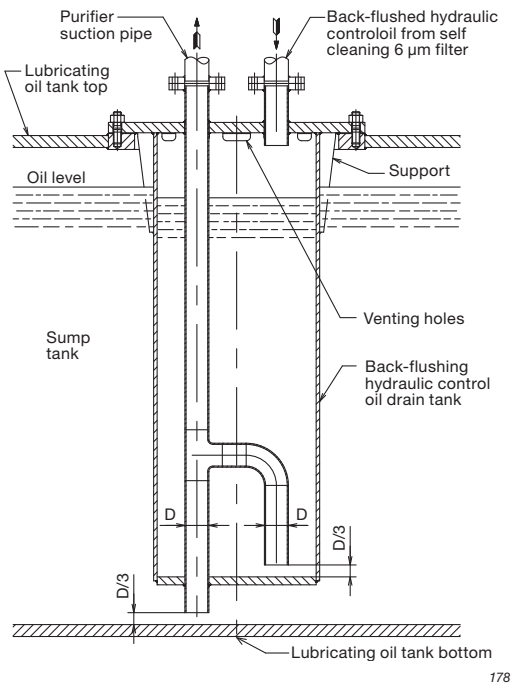

Fig. 8.08.02: Alternative design for the back-flushing servo oil drain tank

Separate System for Hydraulic Control Unit

As an option, the engine can be prepared for the use of a separate hydraulic control oil system Fig. 8.09.01.

The separate hydraulic control oil system can be built as a unit, or be built streamlined in the engine room with the various components placed and fastened to the steel structure of the engine room.

The design and the dimensioning of the various components are based on the aim of having a reliable system that is able to supply low-pressure oil to the inlet of the engine-mounted high-pressure hydraulic control oil pumps at a constant pressure, both at engine stand-by and at various engine loads. The quality of the hydraulic control oil must fulfil the same grade as for our standard integrated lube/cooling/hydraulic-control oil system, i.e. ISO 4406 XX/16/13 equivalent to NAS 1638 Class 7.

The hydraulic control oil system comprises:
1 Hydraulic control oil tank
2 Hydraulic control oil pumps (one for stand-by)
1 Pressure control valve
1 Hydraulic control oil cooler, water-cooled by the low temperature cooling water
1 Three-way valve, temperature controlled
1 Hydraulic control oil filter, duplex type or automatic self-cleaning type
1 Hydraulic control oil fine filter with pump
1 Temperature indicator
1 Pressure indicator
2 Level alarms
Valves and cocks
Piping.

Hydraulic control oil tank
The tank can be made of mild steel plate or be a part of the ship structure.

The tank is to be equipped with flange connections and the items listed below:
1 Oil filling pipe
1 Outlet pipe for pump suctions
1 Return pipe from engine
1 Drain pipe
1 Vent pipe.

The hydraulic control oil tank is to be placed at least 1 m below the hydraulic oil outlet flange, RZ.

Hydraulic control oil pump
The pump must be of the displacement type (e.g. gear wheel or screw wheel pump).
The following data is specified in Fig. 8.09.02:
- Pump capacity
- Pump head
- Delivery pressure
- Working temperature
- Oil viscosity range.

Pressure control valve
The valve is to be of the self-operating flow controlling type, which bases the flow on the pre-defined pressure set point. The valve must be able to react quickly from the fully-closed to the fully-open position (t_{max}= 4 sec), and the capacity must be the same as for the hydraulic control oil low-pressure pumps. The set point of the valve has to be within the adjustable range specified on a separate drawing.
The following data is specified in Fig. 8.09.02:
- Flow rate
- Adjustable differential pressure range across the valve
- Oil viscosity range.

Hydraulic control oil cooler
The cooler must be of the plate heat exchanger or shell and tube type.
The following data is specified in Fig. 8.09.02:
- Heat dissipation
- Oil flow rate
- Oil outlet temperature
- Maximum oil pressure drop across the cooler
- Cooling water flow rate
- Water inlet temperature
- Maximum water pressure drop across the cooler.

Temperature controlled three-way valve
The valve must act as a control valve, with an external sensor.
The following data is specified in Fig. 8.09.02:
- Capacity
- Adjustable temperature range
- Maximum pressure drop across the valve.

Hydraulic control oil filter
The filter is to be of the duplex full flow type with manual change over and manual cleaning or of the automatic self cleaning type.

A differential pressure gauge is fitted onto the filter
The following data is specified in Fig. 8.09.02:
- Filter capacity
- Maximum pressure drop across the filter
- Filter mesh size (absolute)
- Oil viscosity
- Design temperature.

Off-line hydraulic control oil fine filter or purifier
Fig. 8.09.01
The off-line fine filter unit or purifier must be able to treat 15-20% of the total oil volume per hour.

The fine filter is an off-line filter and removes metallic and non-metallic particles larger than 0,8 µm as well as water and oxidation. The filter has a pertaining pump and is to be fitted on the top of the hydraulic control oil tank.

A suitable fine filter unit is:
Make: CJC, C.C. Jensen A/S, Svendborg, Denmark - www.cjc.dk.

For oil volume <10,000 litres:
HDU 27/-MZ-Z with a pump flow of 15-20% of the total oil volume per hour.

For oil volume >10,000 litres:
HDU 27/-GP-DZ with a pump flow of 15-20% of the total oil volume per hour.

Temperature indicator
The temperature indicator is to be of the liquid straight type.

Pressure indicator
The pressure indicator is to be of the dial type.

Level alarm
The hydraulic control oil tank has to have level alarms for high and low oil level.

Piping
The pipes can be made of mild steel.
The design oil pressure is to be 10 bar.
The return pipes are to be placed vertical or laid with a downwards inclination of minimum 15°.

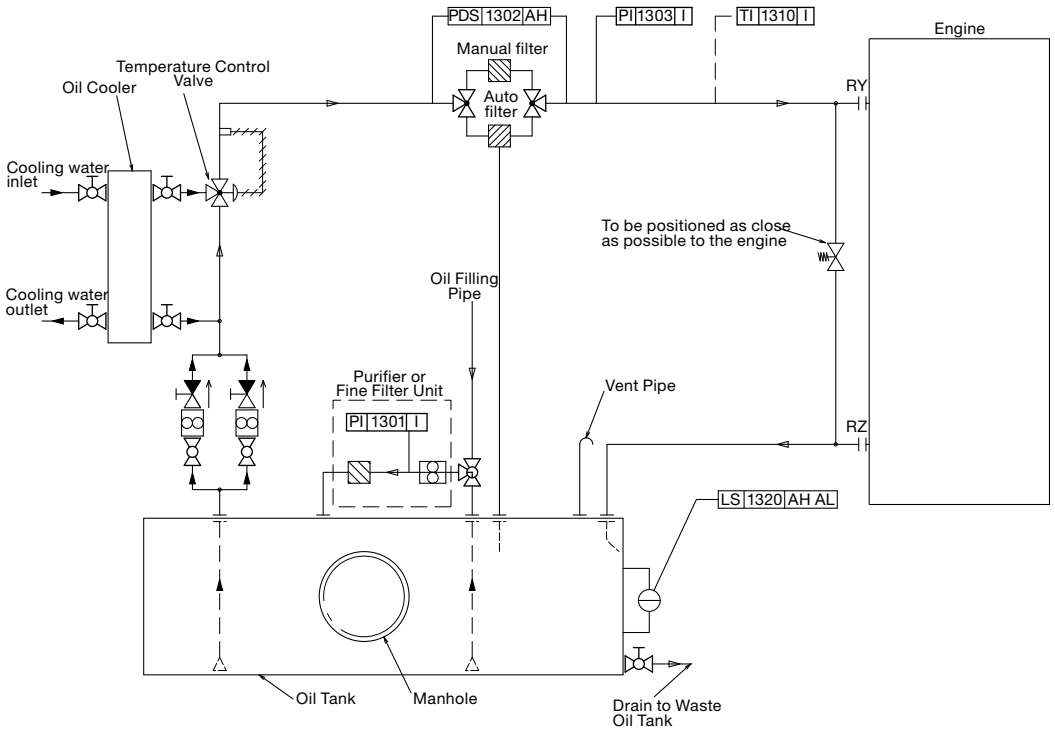

178 53 39-5.0

Fig. 8.09.01: Hydraulic control oil system, manual filter

Hydraulic Control Oil System

This section is available on request

for

K98ME/ME-C7, S90ME-C8, K90ME/ME-C9,

S80ME-C8, S/L70ME-C8, S/L60ME-C8

as well as for

S70ME-C8-GI, S60ME-C8-GI

Hydraulic Control Oil System, S65ME-C8-GI

Cylinder No.:		5	6	7	8
	r/min	95	95	95	95
	kW	14,350	17,220	20,090	22,960
Hydraulic Control Oil tank:					
Volumen, approx.	m³	3	3.5	4	4.5
Hydraulic Control Oil Pump:					
Pump capacity	m³/h	45	55	60	70
Pump head	bar	4	4	4	4
Delivery pressure	bar	4	4	4	4
Design temperature	°C	70	70	70	70
Oil viscosity range	cSt	15 - 90	15 - 90	15 - 90	15 - 90
Pressure Control Valve:					
Lubricating oil flow	m³/h	45	55	60	70
Design pressure	bar	4	4	4	4
Adjustable pressure	bar	2 - 4	2 - 4	2 - 4	2 - 4
Design temperature	°C	55	55	55	55
Oil viscosity range	cSt	15 - 90	15 - 90	15 - 90	15 - 90
Hydraulic Control Oil Cooler:					
Heat dissipation	kW	155	185	215	245
Lubricating oil flow	m³/h	45	55	60	70
Oil outlet temperature	°C	45	45	45	45
Design pressure, oil side	bar	4	4	4	4
Oil pressure drop, max	bar	0.5	0.5	0.5	0.5
Cooling water flow	m³/h	23	27	31	36
S.W. inlet temperature	°C	32	32	32	32
F.W. inlet temperature	°C	36	36	36	36
Water press. drop, max.	bar	0.2	0.2	0.2	0.2
Temperature Controlled Three-way Valve:					
Lubricating oil flow	m³/h	45	55	60	70
Design pressure	bar	4	4	4	4
Temperature set point	°C	45	45	45	45
Design temperature	°C	70	70	70	70
Oil press. drop, max.	bar	0.3	0.3	0.3	0.3
Hydraulic Control Oil Filter:					
Lubricating oil flow	m³/h	45	55	60	70
Absolute fineness	µm	50	50	50	50
Design temperature	°C	55	55	55	55
Design pressure	bar	4	4	4	4
Oil press. drop, max.	bar	0.3	0.3	0.3	0.3

Deviations of the above capacities is to be expected subject to the fuel being used

178 54 42-4.0

Fig. 8.09.02: Hydraulic control oil system

Cylinder Lubrication

9

Cylinder Lubricating Oil System

The cost of the cylinder lubricating oil is one of the largest contributions to total operating costs, next to the fuel oil cost. Another aspect is that the lubrication rate has a great influence on the cylinder condition, and thus on the overhauling schedules and maintenance costs.

It is therefore of the utmost importance that the cylinder lubricating oil system as well as its operation is optimised.

Cylinder oils

Cylinder oils should, preferably, be of the SAE 50 viscosity grade.

Modern high-rated two-stroke engines have a relatively great demand for detergency in the cylinder lube oil. Due to the traditional link between high detergency and high BN in cylinder lube oils, BN 70 lube oil has previously been used for all fuels independent of the sulphur level.

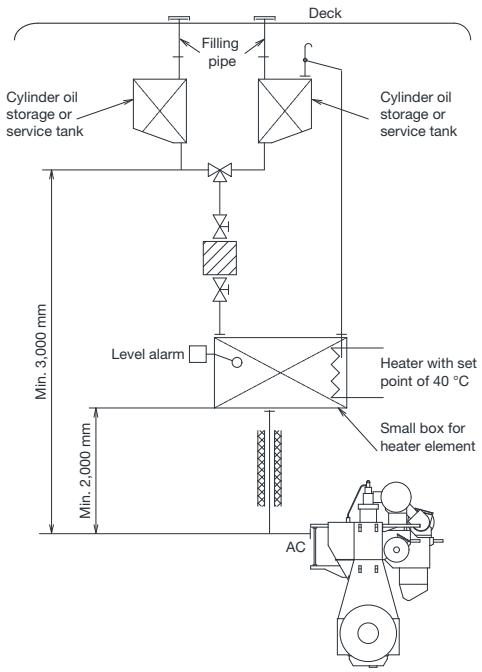

The letters refer to list of 'Counterflanges'

178 52 37-6.1

Fig. 9.01.01: Cylinder lubricating oil system

As the BN (Base Number) gives the level of the oil's ability to neutralize the sulphuric acid, operation on low sulphur fuel as well as LNG and BN 70 cylinder lube oil can give an unwanted amount of Calcium surplus in the combustion, resulting in too many deposits.

Therefore low BN 40-50 cylinder lube oils have been developed and are recommended for use in ME-GI engines operating continuously on gas and 5-10% pilot oil.

In periods when HDO operation with a high sulphur fuel oil is used as a substitute for LNG, it can be necessary to change to BN 70, depending on the time of operation for cylinder feed rate and the overall engine performance and condition.

The cylinder oils listed below have all given long-term satisfactory service during heavy fuel operation in MAN B&W engine installations:

Company	Cylinder oil SAE 50, BN 60-80	Cylinder oil SAE 50, BN 40-50
BP	Energol CLO 50 M Energol CL 605	Energol CL 505 Energol CL-DX 405
Castrol	Cyltech 70 / 80AW	Cyltech 40 SX / 50 S
Chevron *)	Taro Special HT 70	Taro Special HT LS 40
ExxonMobil	Mobilgard 570	Mobilgard L540
Shell	Alexia 50	Alexia LS
Total	Talusia Universal Talusia HR 70	Talusia LS 40
*) Includes Caltex, Chevron and Texaco		

Cylinder oil feed rate (dosage)

Adjustment of the cylinder oil dosage to the sulphur content in the fuel being burnt is further explained in Section 9.02.

MAN B&W Alpha Cylinder Lubrication System

The MAN B&W Alpha cylinder lubrication system, see Figs. 9.02.02a and 9.02.02b, is designed to supply cylinder oil intermittently, e.g. every four engine revolutions with electronically controlled timing and dosage at a defined position.

The cylinder lubricating oil is pumped from the cylinder oil storage tank to the service tank, the size of which depends on the owner's and the yard's requirements, - it is normally dimensioned for minimum two days' cylinder lubricating oil consumption.

Cylinder lubricating oil is fed to the Alpha cylinder lubrication system by gravity from the service tank.

The storage tank and the service tank may alternatively be one and the same tank.

The oil fed to the injectors is pressurised by means of the Alpha Lubricator which is placed on the HCU and equipped with small multi-piston pumps.

The oil pipes fitted on the engine is shown in Fig. 9.02.04.

The whole system is controlled by the Cylinder Control Unit (CCU) which controls the injection frequency on the basis of the engine-speed signal given by the tacho signal and the fuel index.

Prior to start-up, the cylinders can be pre-lubricated and, during the running-in period, the operator can choose to increase the lubricating oil feed rate to a max. setting of 200%.

The MAN B&W Alpha Cylinder Lubricator is preferably to be controlled in accordance with the Alpha ACC (Adaptive Cylinder oil Control) feed rate system.

The yard supply should be according to the items shown in Fig. 9.02.02a within the broken line. With regard to the filter and the small box, plese see Fig. 9.02.05.

Alpha Adaptive Cylinder Oil Control (Alpha ACC)

It is a well-known fact that the actual need for cylinder oil quantity varies with the operational conditions such as load and fuel oil quality. Consequently, in order to perform the optimal lubrication – cost-effectively as well as technically – the cylinder lubricating oil dosage should follow such operational variations accordingly.

The Alpha lubricating system offers the possibility of saving a considerable amount of cylinder lubricating oil per year and, at the same time, to obtain a safer and more predictable cylinder condition.

Working principle

The basic feed rate control should be adjusted in relation to the actual fuel quality and amount being burnt at any given time. The sulphur percentage is a good indicator in relation to wear, and an oil dosage proportional to the sulphur level will give the best overall cylinder condition.

The following two criteria determine the control:

- The cylinder oil dosage shall be proportional to the sulphur percentage in the fuel
- The cylinder oil dosage shall be proportional to the engine load (i.e. the amount of fuel entering the cylinders).

The implementation of the above two criteria will lead to an optimal cylinder oil dosage, proportional to the amount of sulphur entering the cylinders.

Basic and minimum setting with Alpha ACC

The recommendations are valid for all plants, whether controllable pitch or fixed pitch propellers are used.

Safe and very lubricating-economical control after running-in is obtained with a basic setting according to the formula:

Basic lubricating oil setting = 0.20 g/kWh x S%

with a minimum setting of 0.60 g/kWh, i.e. the setting should be kept constant from about 3% sulphur and downwards.

Due to the sulphur dependency, the average cylinder oil dosages rely on the sulphur distribution in worldwide fuel bunkers. Based on deliveries all over the world, the resulting yearly specific cylinder oil dosage is close to 0.65 g/kWh.

Further information on cylinder oil as a function of fuel oil sulphur content and alkalinity of lubricating oil is available from MAN Diesel.

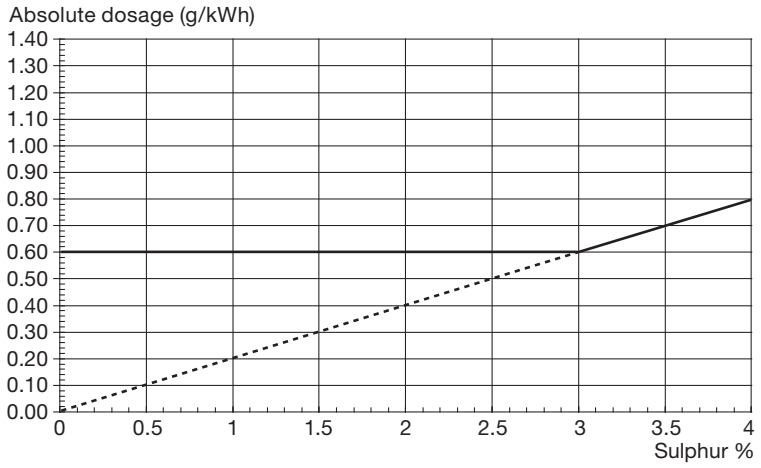

178 61 19-6.0

Fig 9.02.01: Cylinder lubricating oil dosage with Alpha ACC at all loads (BN 70 cylinder oil) after running-in

Cylinder Oil Pipe Heating

In case of low engine room temperature, it can be difficult to keep the cylinder oil temperature at 45 °C at the MAN B&W Alpha Lubricator, mounted on the hydraulic cylinder.

Therefore the cylinder oil pipe from the small tank, see Figs. 9.02.02a and 9.02.02b, in the vessel and of the main cylinder oil pipe on the engine is insulated and electricallly heated.

The engine builder is to make the insulation and heating on the main cylinder oil pipe on the engine. Moreover, the engine builder is to mount the junction box and the thermostat on the engine. See Fig. 9.02.03.

The ship yard is to make the insulation of the cylinder oil pipe in the engine room. The heating cable supplied by the engine builder is to be mounted from the small tank to the juntion box on the engine. See Figs. 9.02.02a and 9.02.02b.

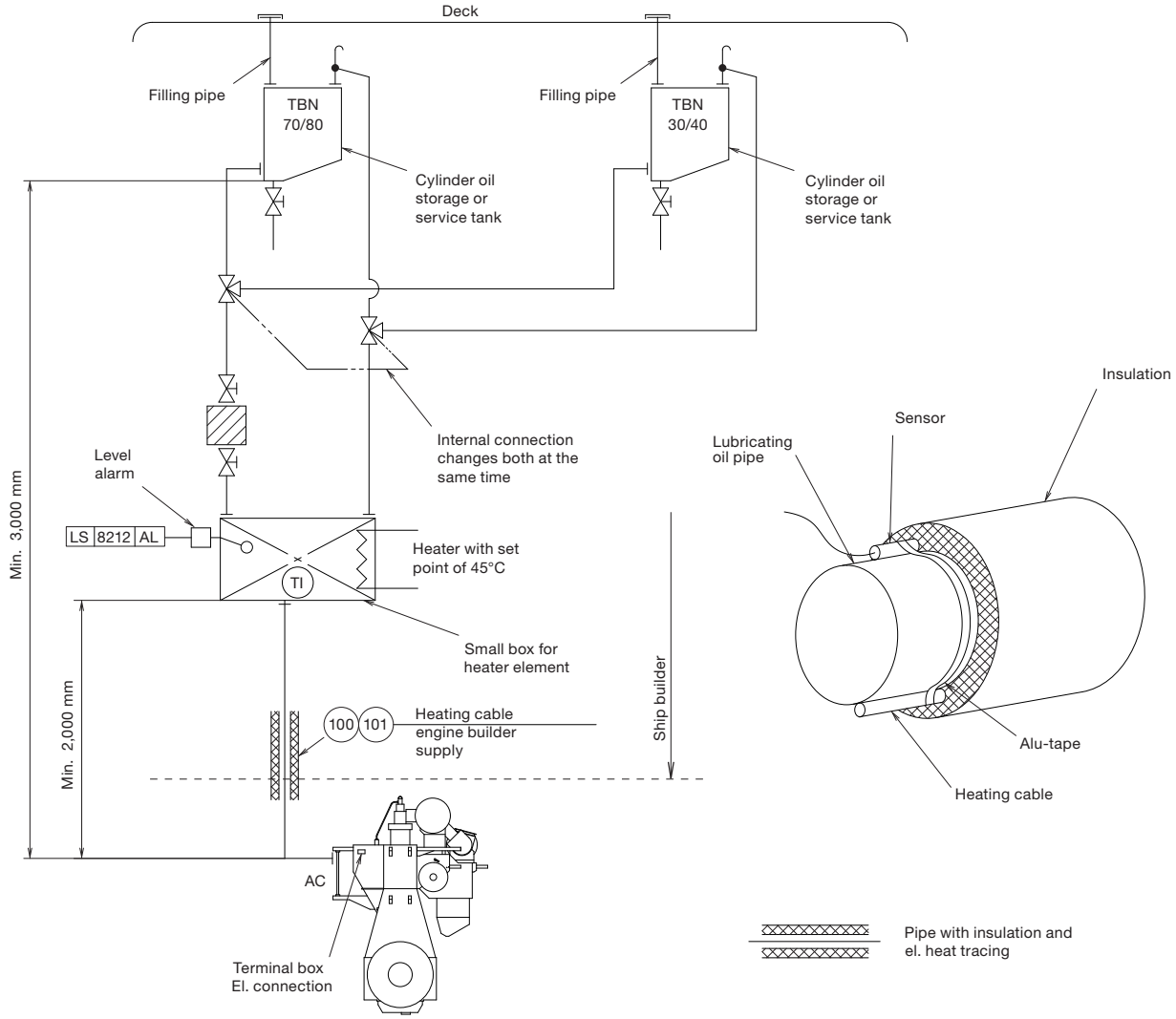

Fig. 9.02.02a: Cylinder lubricating oil system with dual service tanks for two different TBN cylinder oils

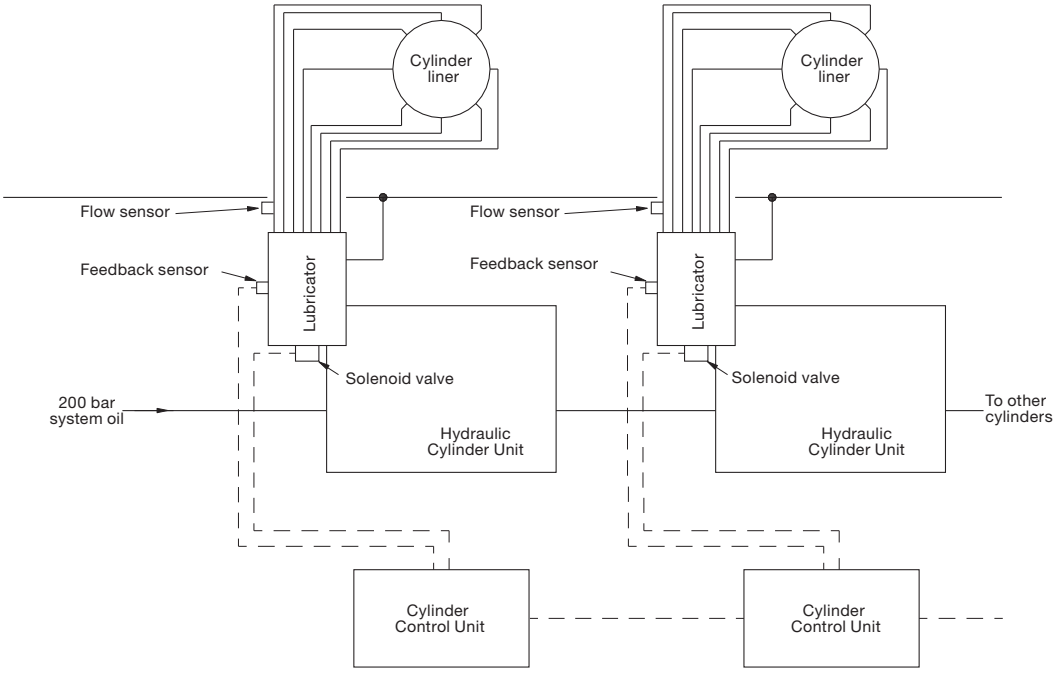

Fig. 9.02.02b: Cylinder lubricating oil system. Example from 80/70/65ME-C engines

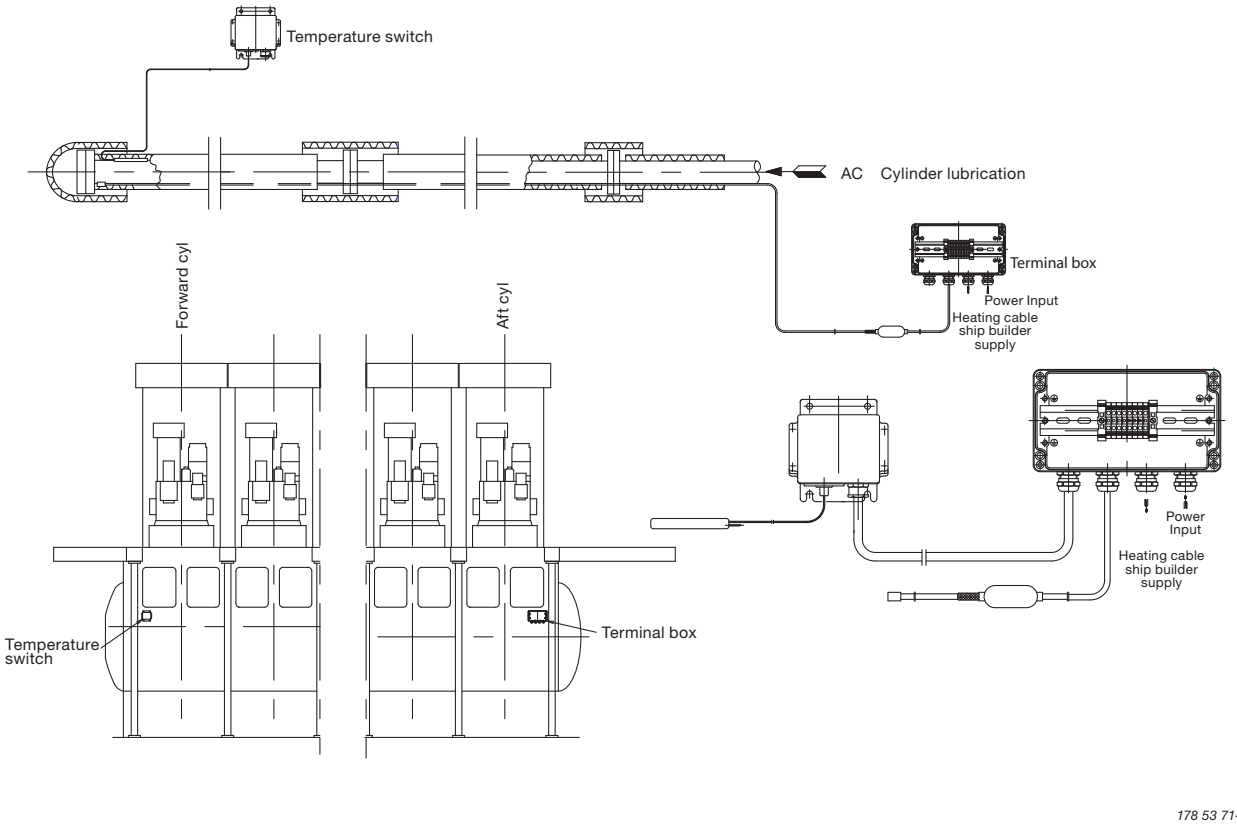

Fig. 9.02.03: Electric heating of cylinder oil pipes

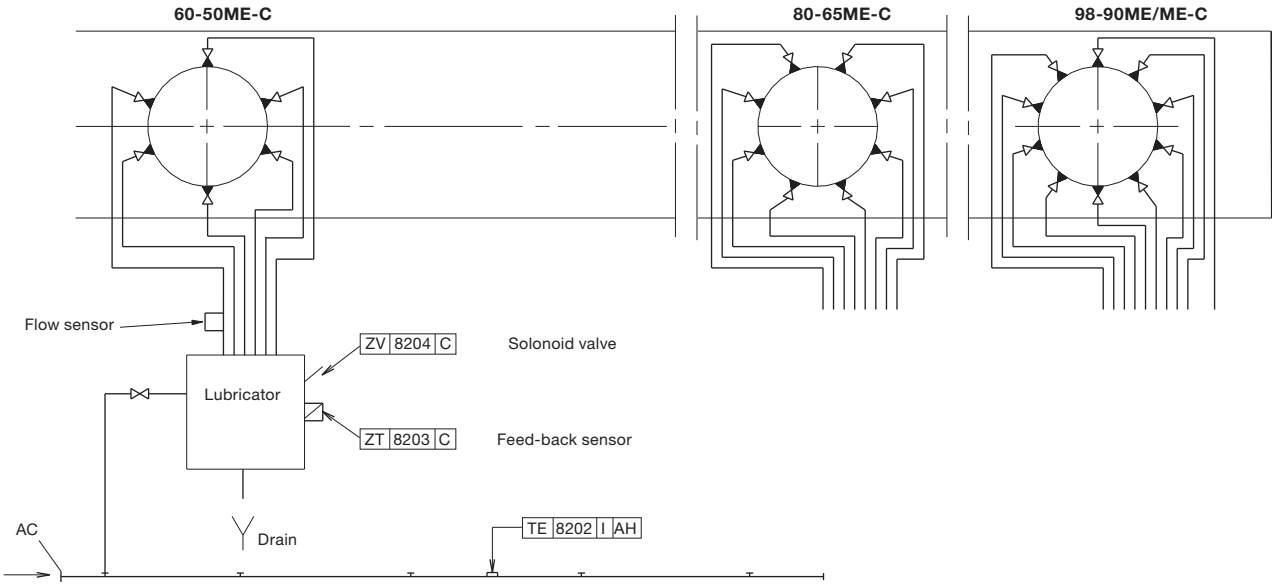

The letters refer to list of 'Counterflanges'

The item No refer to 'Guidance Values Automation'

178 54 68-8.3

Fig. 9.02.04: Cylinder lubricating oil pipes

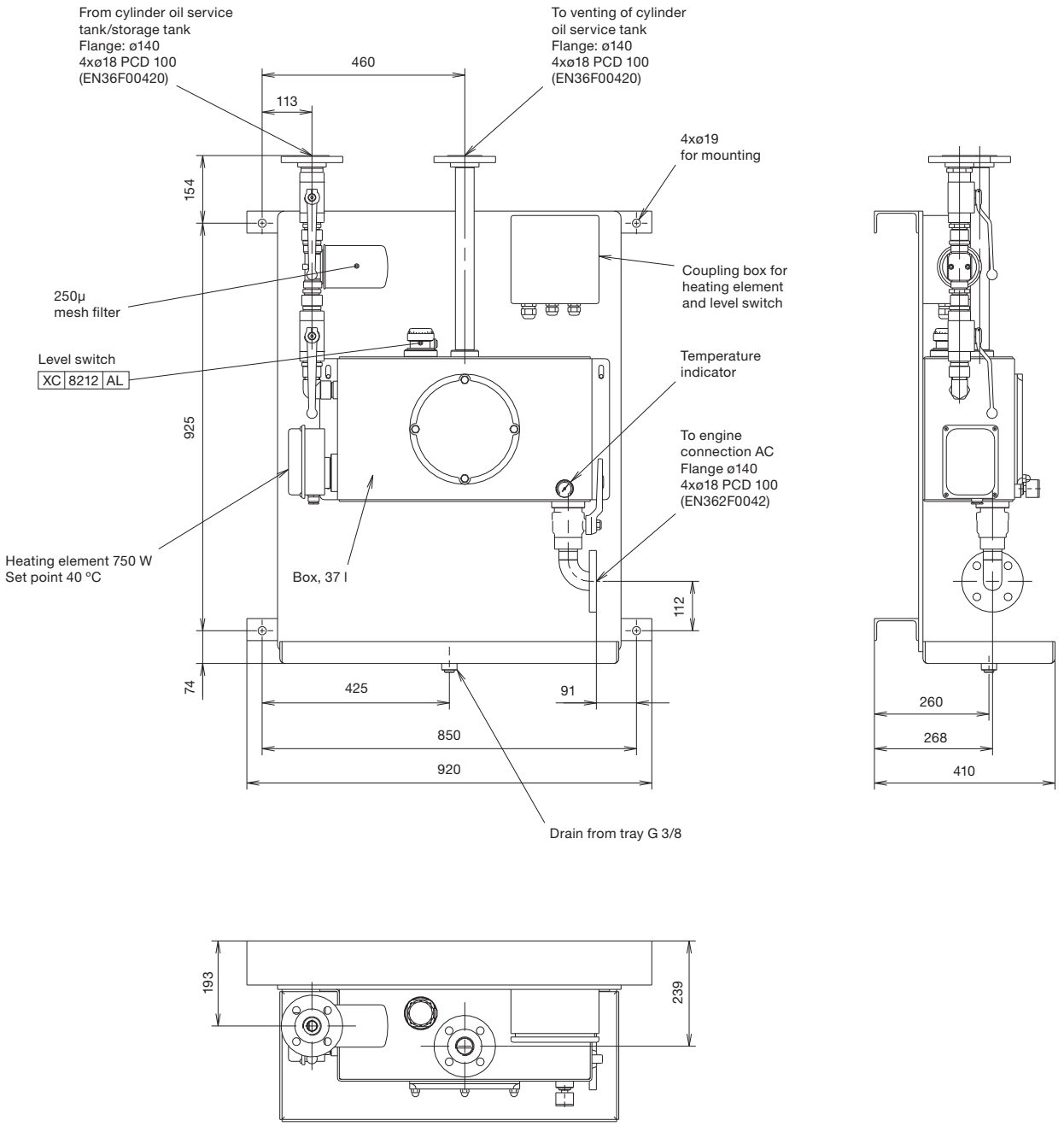

178 52 75-8.1

Fig. 9.02.05: Suggestion for small heating box with filter

Piston Rod Stuffing Box Drain Oil

10

Stuffing Box Drain Oil System

For engines running on heavy fuel, it is important that the oil drained from the piston rod stuffing boxes is not led directly into the system oil, as the oil drained from the stuffing box is mixed with sludge from the scavenge air space.

The performance of the piston rod stuffing box on the engines has proved to be very efficient, primarily because the hardened piston rod allows a higher scraper ring pressure.

The amount of drain oil from the stuffing boxes is about 5 - 10 litres/24 hours per cylinder during normal service. In the running-in period, it can be higher.

The relatively small amount of drain oil is led to the general oily waste drain tank or is burnt in the incinerator, Fig. 10.01.01. (Yard's supply).

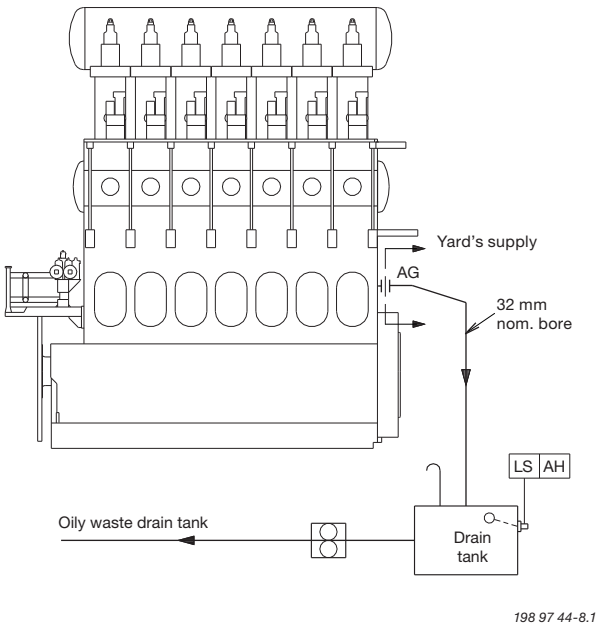

Fig. 10.01.01: Stuffing box drain oil system

Central Cooling Water System

11

Central Cooling Water System

The water cooling can be arranged in several configurations, the most common system choice being a Central cooling water system.

Advantages of the central cooling system:

- Only one heat exchanger cooled by seawater, and thus, only one exchanger to be overhauled
- All other heat exchangers are freshwater cooled and can, therefore, be made of a less expensive material
- Few non-corrosive pipes to be installed
- Reduced maintenance of coolers and components
- Increased heat utilisation.

Disadvantages of the central cooling system:

- Three sets of cooling water pumps (seawater, central water and jacket water.
- Higher first cost.

For information on the alternative Seawater Cooling System, see Chapter 12.

An arrangement common for the main engine and MAN Diesel auxiliary engines is available on request.

For further information about common cooling water system for main engines and auxiliary engines please refer to our publication:

Uni-concept Auxiliary Systems for Two-Stroke Main Engines and Four-Stroke Auxiliary Engines

The publication is available at www.mandieselturbo.com under ‘Products’ → ‘Marine Engines & Systems’ → ‘Low Speed’ → ‘Technical Papers’.

Central Cooling Water System

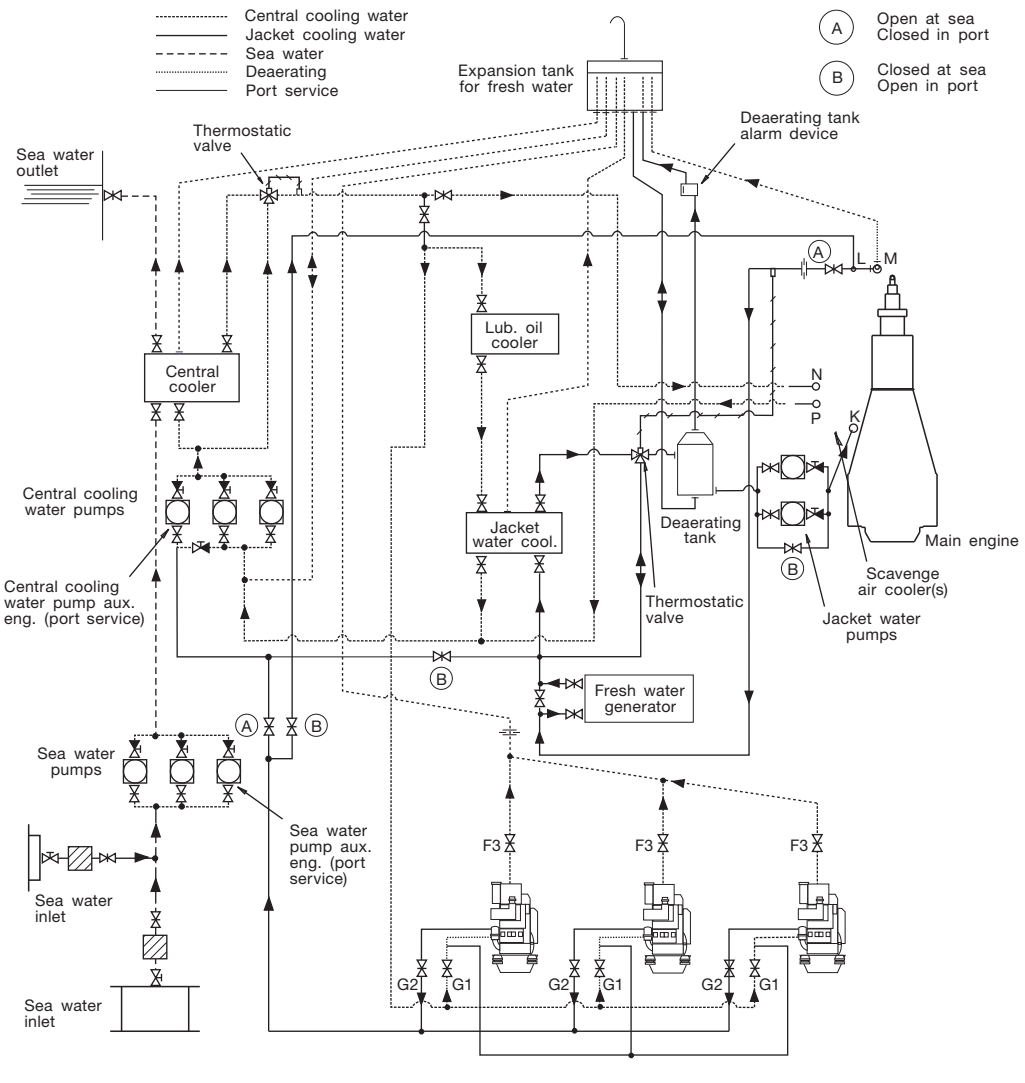

Fig. 11.02.01: Central cooling system

The central cooling water system is characterised by having only one heat exchanger cooled by seawater, and by the other coolers, including the jacket water cooler, being cooled by the freshwater low temperature (FW-LT) system.

In order to prevent too high a scavenge air temperature, the cooling water design temperature in the FW-LT system is normally 36 °C, corresponding to a maximum seawater temperature of 32 °C.

Our recommendation of keeping the cooling water inlet temperature to the main engine scavenge air cooler as low as possible also applies to the central cooling system. This means that the temperature control valve in the FW-LT circuit is to be set to minimum 10 °C, whereby the temperature follows the outboard seawater temperature when this exceeds 10 °C.

For external pipe connections, we prescribe the following maximum water velocities:

Jacket water ..... 3.0 m/s
Central cooling water (FW-LT) ..... 3.0 m/s
Seawater ..... 3.0 m/s

Central Cooling System, common for Main Engine and MAN Diesel GenSets

Design features and working principle

The camshaft lubricating oil cooler, is omitted in plants using the uni-lubricating oil system for the main engine.

The low and high temperature systems are directly connected to gain the advantage of preheating the main engine and GenSets during standstill.

As all fresh cooling water is inhibited and common for the central cooling system, only one common expansion tank, is necessary for deaeration of both the low and high temperature cooling systems. This tank accommodates the difference in water volume caused by changes in the temperature.

To prevent the accumulation of air in the cooling water system, a deaerating tank, is located below the expansion tank.

An alarm device is inserted between the deaerating tank and the expansion tank so that the operating crew can be warned if excess air or gas is released, as this signals a malfunction of engine components.

Operation at sea

The seawater cooling pump, supplies seawater from the sea chests through the central cooler, and overboard. Alternatively, some shipyards use a pumpless scoop system.

On the freshwater side, the central cooling water pump, circulates the low-temperature fresh water, in a cooling circuit, directly through the lubricating oil cooler of the main engine, the GenSets and the scavenge air cooler(s).

The jacket water cooling system for the GenSets is equipped with engine-driven pumps and a by-pass system integrated in the low-temperature system.

The main engine jacket system has an independent pump circuit with a jacket water pump, circulating the cooling water through the main engine to the fresh water generator, and the jacket water cooler.

A thermostatically controlled 3-way valve, at the jacket cooler outlet mixes cooled and uncooled water to maintain an outlet water temperature of 80-85 °C from the main engine.

Operation in port

During operation in port, when the main engine is stopped but one or more GenSets are running, valves A are closed and valves B are opened.

A small central water pump, will circulate the necessary flow of water for the air cooler, the lubricating oil cooler, and the jacket cooler of the GenSets. The auxiliary engines-driven pumps and the previously mentioned integrated loop ensure a satisfactory jacket cooling water temperature at the GenSets outlet.

The main engine and the stopped GenSets are preheated as described for the jacket water system.

The other data for the jacket cooling water system can be found in Chapter 06.06.

For further information about a common cooling water system for main engines and MAN Diesel auxiliary engines please refer to our publication:

Uni-concept Auxiliary Systems for Two-Stroke Main Engines and Four-Stroke Auxiliary Engines

The publication is available at www.mandieselturbo.com under ‘Products’ → ‘Marine Engines & Systems’ → ‘Low Speed’ → ‘Technical Papers’.

Components for Central Cooling Water System

Seawater cooling pumps

The pumps are to be of the centrifugal type.

Seawater flow..... see 'List of Capacities'
Pump head.....2.5 bar
Test pressure.....according to class rules
Working temperature, normal .....0-32 °C
Working temperature ..... maximum 50 °C

The flow capacity must be within a range from 100 to 110% of the capacity stated.

The differential pressure of the pumps is to be determined on the basis of the total actual pressure drop across the cooling water system.

Central cooler

The cooler is to be of the shell and tube or plate heat exchanger type, made of seawater resistant material.

Heat dissipation..... see 'List of Capacities'
Central cooling water flow ..... see 'List of Capacities'
Central cooling water temperature, outlet..... 36 °C
Pressure drop on central cooling side .... max. 0.2 bar
Seawater flow..... see 'List of Capacities'
Seawater temperature, inlet ..... 32 °C
Pressure drop on
seawater side..... maximum 0.2 bar

The pressure drop may be larger, depending on the actual cooler design.

The heat dissipation and the seawater flow figures are based on MCR output at tropical conditions, i.e. a seawater temperature of 32 °C and an ambient air temperature of 45 °C.

Overload running at tropical conditions will slightly increase the temperature level in the cooling system, and will also slightly influence the engine performance.

Central cooling water pumps

The pumps are to be of the centrifugal type.

Central cooling water flow... see 'List of Capacities'
Pump head.....2.5 bar
Delivery pressure .....depends on location of expansion tank
Test pressure.....according to class rules
Working temperature .....80 °C
Design temperature..... 100 °C

The flow capacity must be within a range from 100 to 110% of the capacity stated.

The 'List of Capacities' covers the main engine only. The differential pressure provided by the pumps is to be determined on the basis of the total actual pressure drop across the cooling water system.

Central cooling water thermostatic valve

The low temperature cooling system is to be equipped with a three-way valve, mounted as a mixing valve, which by-passes all or part of the fresh water around the central cooler.

The sensor is to be located at the outlet pipe from the thermostatic valve and is set so as to keep a temperature level of minimum 10 °C.

Jacket water system

Due to the central cooler the cooling water inlet temperature is about 4 °C higher for for this system compared to the seawater cooling system. The input data are therefore different for the scavenge air cooler, the lube oil cooler and the jacket water cooler.

The heat dissipation and the central cooling water flow figures are based on an MCR output at tropical conditions, i.e. a maximum seawater temperature of 32 °C and an ambient air temperature of 45 °C.

Jacket water cooling pump

The pumps are to be of the centrifugal type.
Jacket water flow ..... see 'List of Capacities'
Pump head.....3.0 bar
Delivery pressure .....depends on location of expansion tank
Test pressure.....according to class rules
Working temperature ..... 80 °C
Design temperature..... 100 °C

The flow capacity must be within a range from 100 to 110% of the capacity stated.

The stated of capacities cover the main engine only. The pump head of the pumps is to be determined on the basis of the total actual pressure drop across the cooling water system.

Scavenge air cooler

The scavenge air cooler is an integrated part of the main engine.

Heat dissipation ..... see 'List of Capacities'
Central cooling water flow ..... see 'List of Capacities'
Central cooling temperature, inlet ..... 36 °C
Pressure drop on FW-LT water side.... approx. 0.5 bar

Lubricating oil cooler

See Chapter 8 'Lubricating Oil'.

Jacket water cooler

The cooler is to be of the shell and tube or plate heat exchanger type.

Heat dissipation ..... see 'List of Capacities'
Jacket water flow ..... see 'List of Capacities'
Jacket water temperature, inlet..... 80 °C
Pressure drop on jacket water side ....max. 0.2 bar
Central cooling water flow... see 'List of Capacities'
Central cooling water
temperature, inlet .....approx. 42 °C
Pressure drop on Central
cooling water side.....max. 0.2 bar

The other data for the jacket cooling water system can be found in Chapter 12.

For further information about a common cooling water system for main engines and MAN Diesel auxiliary engines, please refer to our publication:

Uni-concept Auxiliary Systems for Two-Stroke Main Engines and Four-Stroke Auxiliary Engines

The publication is available at www.mandieselturbo.com under 'Products' → 'Marine Engines & Systems' → 'Low Speed' → 'Technical Papers'.

Seawater Cooling System

12

Seawater Systems

The water cooling can be arranged in several configurations, the most simple system choices being seawater and central cooling water system:

- A **seawater cooling system** and a jacket cooling water system
- The advantages of the seawater cooling system are mainly related to first cost, viz:
- Only two sets of cooling water pumps (seawater and jacket water)
- Simple installation with few piping systems.

Whereas the disadvantages are:

- Seawater to all coolers and thereby higher maintenance cost
- Expensive seawater piping of non-corrosive materials such as galvanised steel pipes or Cu-Ni pipes.

Seawater Cooling System

The seawater cooling system is used for cooling, the main engine lubricating oil cooler, the jacket water cooler and the scavenge air cooler, see Fig. 12.02.01.

The lubricating oil cooler for a PTO step-up gear should be connected in parallel with the other coolers. The capacity of the seawater pump is based on the outlet temperature of the seawater being maximum 50 °C after passing through the coolers – with an inlet temperature of maximum 32 °C (tropical conditions), i.e. a maximum temperature increase of 18 °C.

The valves located in the system fitted to adjust the distribution of cooling water flow are to be provided with graduated scales.

The inter-related positioning of the coolers in the system serves to achieve:

- The lowest possible cooling water inlet temperature to the lubricating oil cooler in order to obtain the cheapest cooler. On the other hand, in order to prevent the lubricating oil from stiffening in cold services, the inlet cooling water temperature should not be lower than 10 °C
- The lowest possible cooling water inlet temperature to the scavenge air cooler, in order to keep the fuel oil consumption as low as possible.

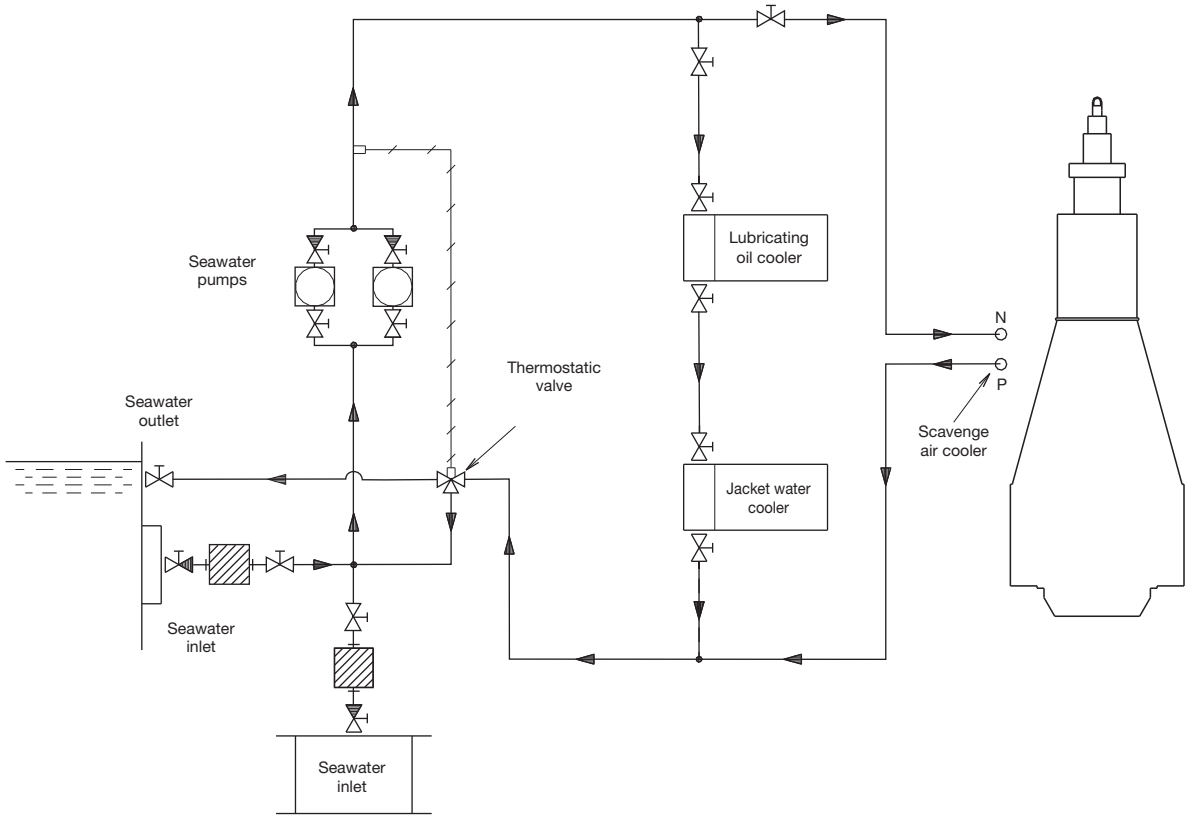

198 98 13-2.5

The letters refer to list of 'Counterflanges'

Fig. 12.02.01: Seawater cooling system

Seawater Cooling Pipes

Please note that the information is to be found in the Project Guide for the relevant engine type.

Components for Seawater Cooling System

Seawater cooling pump

The pumps are to be of the centrifugal type.

Seawater flow..... see 'List of Capacities'
Pump head.....2.5 bar
Test pressure..... according to class rule
Working temperature ..... maximum 50 °C

The flow capacity must be within a range from 100 to 110% of the capacity stated.

Lubricating oil cooler

See Chapter 8 'Lubricating Oil'.

Jacket water cooler

The cooler is to be of the shell and tube or plate heat exchanger type, made of seawater resistant material.

Heat dissipation ..... see 'List of Capacities'
Jacket water flow ..... see 'List of Capacities'
Jacket water temperature, inlet..... 80 °C
Pressure drop
on jacket water side .....maximum 0.2 bar
Seawater flow..... see 'List of Capacities'
Seawater temperature, inlet ..... 38 °C
Pressure drop on
seawater side .....maximum 0.2 bar

The heat dissipation and the seawater flow are based on an MCR output at tropical conditions, i.e. seawater temperature of 32 °C and an ambient air temperature of 45 °C.

Scavenge air cooler

The scavenge air cooler is an integrated part of the main engine.

Heat dissipation ..... see 'List of Capacities'
Seawater flow ..... see 'List of Capacities'
Seawater temperature,
for seawater cooling inlet, max. ..... 32 °C
Pressure drop on
cooling water side ..... between 0.1 and 0.5 bar

The heat dissipation and the seawater flow are based on an MCR output at tropical conditions, i.e. seawater temperature of 32 °C and an ambient air temperature of 45 °C.

Seawater thermostatic valve

The temperature control valve is a three-way valve which can recirculate all or part of the seawater to the pump's suction side. The sensor is to be located at the seawater inlet to the lubricating oil cooler, and the temperature level must be a minimum of +10 °C.

Seawater flow..... see 'List of Capacities'
Temperature range,
adjustable within .....+5 to +32 °C

Jacket Cooling Water System

The jacket cooling water system is used for cooling the cylinder liners, cylinder covers and exhaust valves of the main engine and heating of the fuel oil drain pipes, see Fig. 12.05.01.

The jacket water pump) draws water from the jacket water cooler outlet and delivers it to the engine.

At the inlet to the jacket water cooler there is a thermostatically controlled regulating valve, with a sensor at the engine cooling water outlet, which keeps the main engine cooling water outlet at a temperature of 80 °C.

The engine jacket water must be carefully treated, maintained and monitored so as to avoid corrosion, corrosion fatigue, cavitation and scale formation. It is recommended to install a preheater if preheating is not available from the auxiliary engines jacket cooling water system.

The venting pipe in the expansion tank should end just below the lowest water level, and the expansion tank must be located at least 5 m above the engine cooling water outlet pipe.

The freshwater generator, if installed, may be connected to the seawater system if the generator does not have a separate cooling water pump. The generator must be coupled in and out slowly over a period of at least 3 minutes.

For external pipe connections, we prescribe the following maximum water velocities:

Jacket water ..... 3.0 m/s
Seawater ..... 3.0 m/s

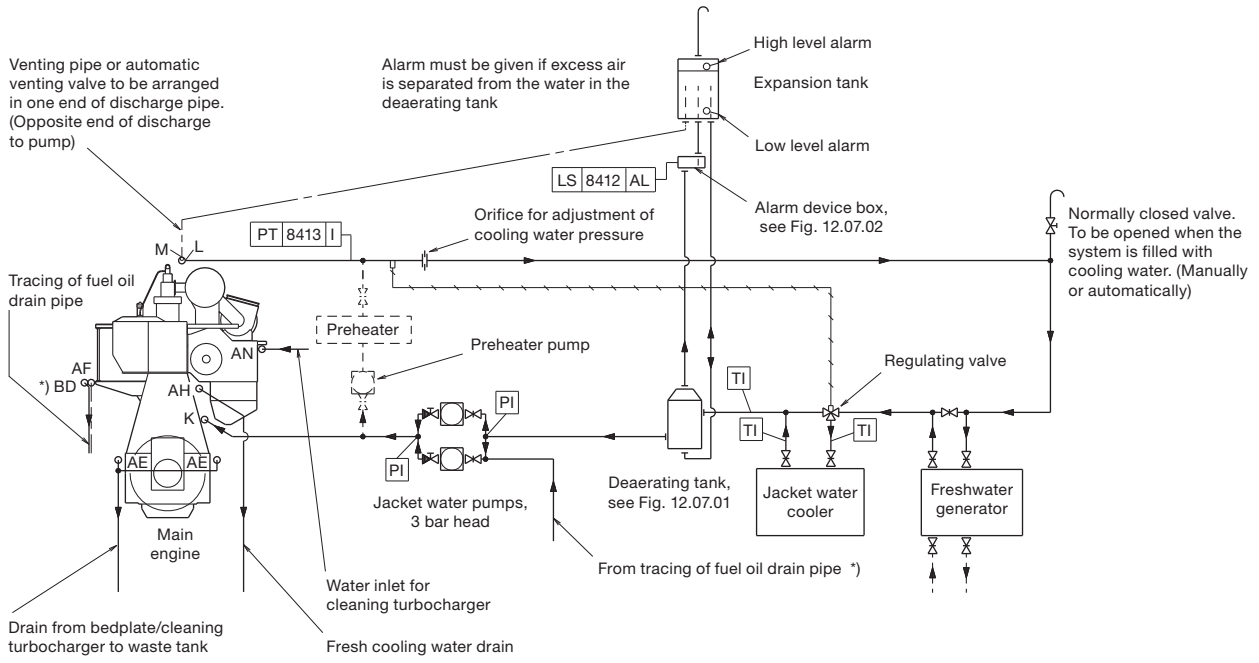

Jacket cooling water
Sea water
Fuel oil

The letters refer to list of 'Counterflanges', Fig. 5.10.01

*) Flange BD and the tracing line are not applicable on MC/MC-C engines type 42 and smaller

178 50 17-2.5

Fig. 12.05.01: Jacket cooling water system

Jacket Cooling Water Pipes

Please note that the information is to be found in the Project Guide for the relevant engine type.

Components for Jacket Cooling Water System

Freshwater generator

If a generator is installed in the ship for production of freshwater by utilising the heat in the jacket water cooling system it should be noted that the actual available heat in the jacket water system is lower than indicated by the heat dissipation figures given in the 'List of capacities.' This is because the latter figures are used for dimensioning the jacket water cooler and hence incorporate a safety margin which can be needed when the engine is operating under conditions such as, e.g. overload. Normally, this margin is 10% at nominal MCR.

The calculation of the heat actually available at specified MCR for a derated diesel engine is stated in Chapter 6 'List of capacities'.

For illustration of installation of fresh water generator see Fig. 12.05.01.

Jacket water thermostatic valve

The temperature control system can be equipped with a three-way valve mounted as a diverting valve, which by-pass all or part of the jacket water around the jacket water cooler.

The sensor is to be located at the outlet from the main engine, and the temperature level must be adjustable in the range of 70-90 °C.

Jacket water preheater

When a preheater is installed in the jacket cooling water system, its water flow, and thus the preheater pump capacity (4 46 625), should be about 10% of the jacket water main pump capacity. Based on experience, it is recommended that the pressure drop across the preheater should be approx. 0.2 bar. The preheater pump and main pump should be electrically interlocked to avoid the risk of simultaneous operation.

The preheater capacity depends on the required preheating time and the required temperature increase of the engine jacket water. The temperature and time relationships are shown in Fig. 12.08.01.

In general, a temperature increase of about 35 °C (from 15 °C to 50 °C) is required, and a preheating time of 12 hours requires a preheater capacity of about 1% of the engine`s nominal MCR power.

Expansion tank

The total expansion tank volume has to be approximate 10% of the total jacket cooling water amount in the system.

Fresh water treatment

MAN Diesel's recommendations for treatment of the jacket water / freshwater are available on request.

Temperature at Start of Engine

In order to protect the engine, some minimum temperature restrictions have to be considered before starting the engine and, in order to avoid corrosive attacks on the cylinder liners during starting.

Normal start of engine

Normally, a minimum engine jacket water temperature of 50 °C is recommended before the engine is started and run up gradually to 90% of specified MCR speed.

For running between 90% and 100% of specified MCR speed, it is recommended that the load be increased slowly – i.e. over a period of 30 minutes.

Start of cold engine

In exceptional circumstances where it is not possible to comply with the above-mentioned recommendation, a minimum of 20 °C can be accepted before the engine is started and run up slowly to 90% of specified MCR speed.

However, before exceeding 90% specified MCR speed, a minimum engine temperature of 50 °C should be obtained and, increased slowly – i.e. over a period of at least 30 minutes.

The time period required for increasing the jacket water temperature from 20 °C to 50 °C will depend on the amount of water in the jacket cooling water system, and the engine load.

Note:
The above considerations are based on the assumption that the engine has already been well run-in.

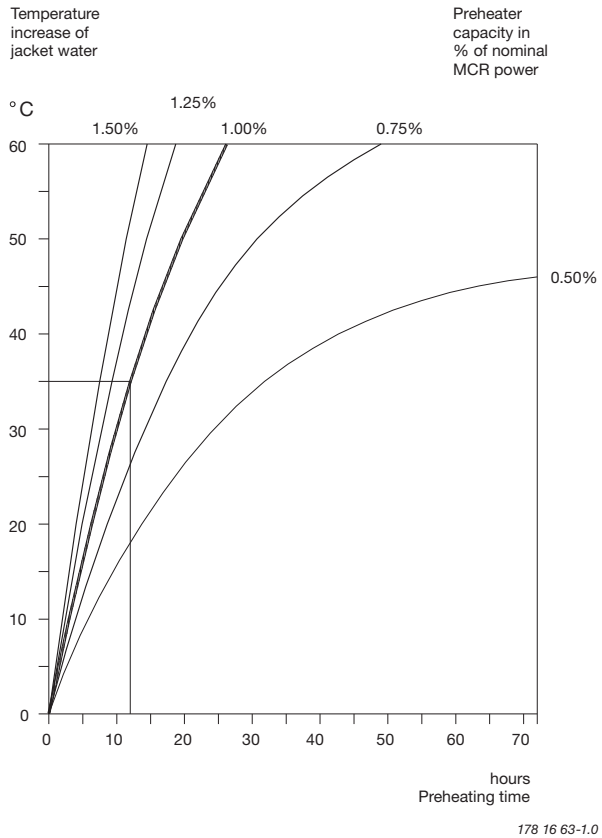

Fig. 12.08.01: Jacket water preheater

Preheating of diesel engine

Preheating during standstill periods

During short stays in port (i.e. less than 4-5 days), it is recommended that the engine is kept preheated, the purpose being to prevent temperature variation in the engine structure and corresponding variation in thermal expansions and possible leakages.

The jacket cooling water outlet temperature should be kept as high as possible and should – before starting-up – be increased to at least 50 °C, either by means of cooling water from the auxiliary engines, or by means of a built-in preheater in the jacket cooling water system, or a combination.

Starting and Control Air

13

Starting and Control Air Systems

The starting air of 30 bar is supplied by the starting air compressors to the starting air receivers and from these to the main engine inlet 'A'.

Through a reduction station, filtered compressed air at 7 bar is supplied to the control air for exhaust valve air springs, through engine inlet 'B'

Through a reduction valve, compressed air is supplied at 10 bar to 'AP' for turbocharger cleaning (soft blast), and a minor volume used for the fuel valve testing unit.

Please note that the air consumption for control air, safety air, turbocharger cleaning, sealing air for exhaust valve and for fuel valve testing unit are momentary requirements of the consumers.

The components of the starting and control air systems are further desribed in Section 13.02.

Starting air and control air for the GenSets can be supplied from the same starting air receivers, as for the main engine.

For information about a common starting air system for main engines and MAN Diesel auxiliary engines, please refer to our publication:

Uni-concept Auxiliary Systems for Two-Stroke Main Engines and Four-Stroke Auxiliary Engines

The publication is available at www.mandieselturbo.com under 'Products' → 'Marine Engines & Systems' → 'Low Speed' → 'Technical Papers'.

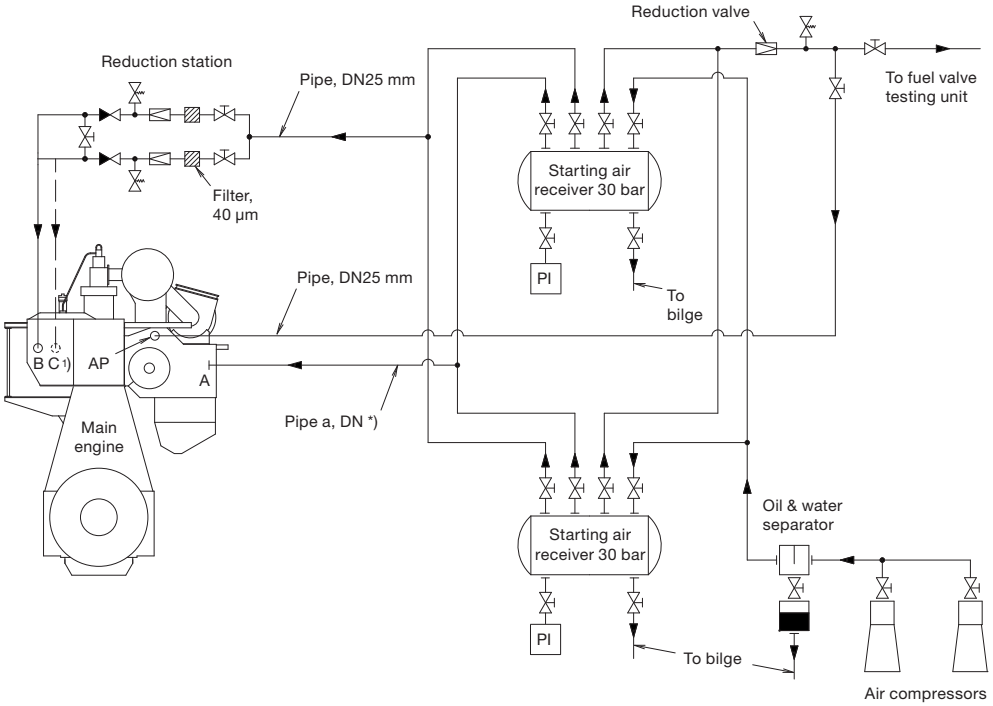

The letters refer to list of 'Counterflanges'
*) The nominal dimension of Pipe a depends on the engine type
1) Engine inlet C is only applicable for MC and MC-C engines

079 61 01-7.1.1a

Fig. 13.01.01: Starting and control air systems

Components for Starting Air System

Starting air compressors

The starting air compressors are to be of the water-cooled, two-stage type with intercooling.

More than two compressors may be installed to supply the total capacity stated.

Air intake quantity:
Reversible engine,
for 12 starts ..... see 'List of capacities'
Non-reversible engine,
for 6 starts ..... see 'List of capacities'
Delivery pressure ..... 30 bar

Starting air receivers

The volume of the two receivers is:
Reversible engine,
for 12 starts ..... see 'List of capacities' *
Non-reversible engine,
for 6 starts ..... see 'List of capacities' *
Working pressure ..... 30 bar
Test pressure ..... according to class rule

* The volume stated is at 25 °C and 1,000 mbar

Reduction station for control and safety air

In normal operating, each of the two lines supplies one engine inlet. During maintenance, three isolating valves in the reduction station allow one of the two lines to be shut down while the other line supplies both engine inlets, see Fig. 13.01.01.

Reduction ..... from 30-10 bar to 7 bar
(Tolerance ±10%)

Flow rate, free air ..... 2,100 Normal liters/min
equal to 0.035 m^3/s
Filter, fineness ..... 40 μm

Reduction valve for turbocharger cleaning etc

Reduction .....from 30-10 bar to 7 bar
(Tolerance ±10%)

Flow rate, free air ..... 2,600 Normal liters/min
equal to 0.043 m^3/s

The consumption of compressed air for control air, exhaust valve air springs and safety air as well as air for turbocharger cleaning and fuel valve testing is covered by the capacities stated for air receivers and compressors in the list of capacities.

Starting and control air pipes

The piping delivered with and fitted onto the main engine is shown in the following figures in Section 13.03:

Fig. 13.03.01 Starting air pipes
Fig. 13.03.02 Air spring pipes, exhaust valves

Turning gear

The turning wheel has cylindrical teeth and is fitted to the thrust shaft. The turning wheel is driven by a pinion on the terminal shaft of the turning gear, which is mounted on the bedplate.

Engagement and disengagement of the turning gear is effected by displacing the pinion and terminal shaft axially. To prevent the main engine from starting when the turning gear is engaged, the turning gear is equipped with a safety arrangement which interlocks with the starting air system.

The turning gear is driven by an electric motor with a built-in gear and brake. Key specifications of the electric motor and brake are stated in Section 13.04.

Starting and Control Air Pipes

Please note that the information is to be found in the Project Guide for the relevant engine type.

Scavenge Air

14

Scavenge Air System

The engine is supplied with scavenge air from turbochargers, located on the exhaust side of the engine. However, some engines can be fitted with one turbocharger located on the aft end of the engine.

The compressor of the turbocharger draws air from the engine room, through an air filter, and the compressed air is cooled by the scavenge air cooler, one per turbocharger. The scavenge air cooler is provided with a water mist catcher, which prevents condensate water from being carried with the air into the scavenge air receiver and to the combustion chamber.

The scavenge air system is an integrated part of the main engine, see Figs. 14.01.01 and 14.02.01.

The engine power figures and the data in the list of capacities are based on MCR at tropical conditions, i.e. a seawater temperature of 32 °C, or a freshwater temperature of 36 °C, and an ambient air intake temperature of 45 °C.

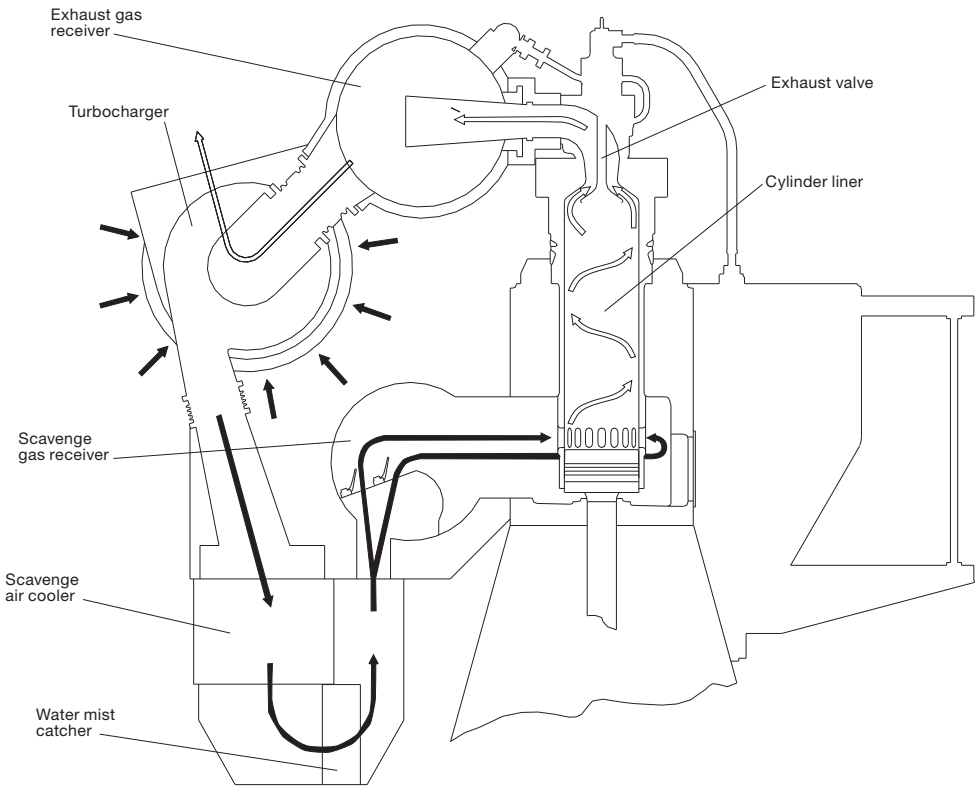

178 07 27-4.2

Fig. 14.01.01: Scavenge Air System

Auxiliary Blowers

The engine is provided with a minimum of two electrically driven auxiliary blowers, the actual number depending on the number of cylinders as well as the turbocharger make and amount.

The auxiliary blowers are fitted onto the main engine. Between the scavenge air cooler and the scavenge air receiver, non-return valves are fitted which close automatically when the auxiliary blowers start supplying the scavenge air.

Auxiliary blower operation

The auxiliary blowers start operating consecutively before the engine is started and will ensure complete scavenging of the cylinders in the starting phase, thus providing the best conditions for a safe start.

During operation of the engine, the auxiliary blowers will start automatically whenever the blower inlet pressure drops below a preset pressure, corresponding to an engine load of approximately 25-35%.

The blowers will continue to operate until the blower inlet pressure again exceeds the preset pressure plus an appropriate hysteresis (i.e. taking recent pressure history into account), corresponding to an engine load of approximately 30-40%.

Emergency running

If one of the auxiliary blowers is out of function, the other auxiliary blower will function in the system, without any manual adjustment of the valves being necessary.

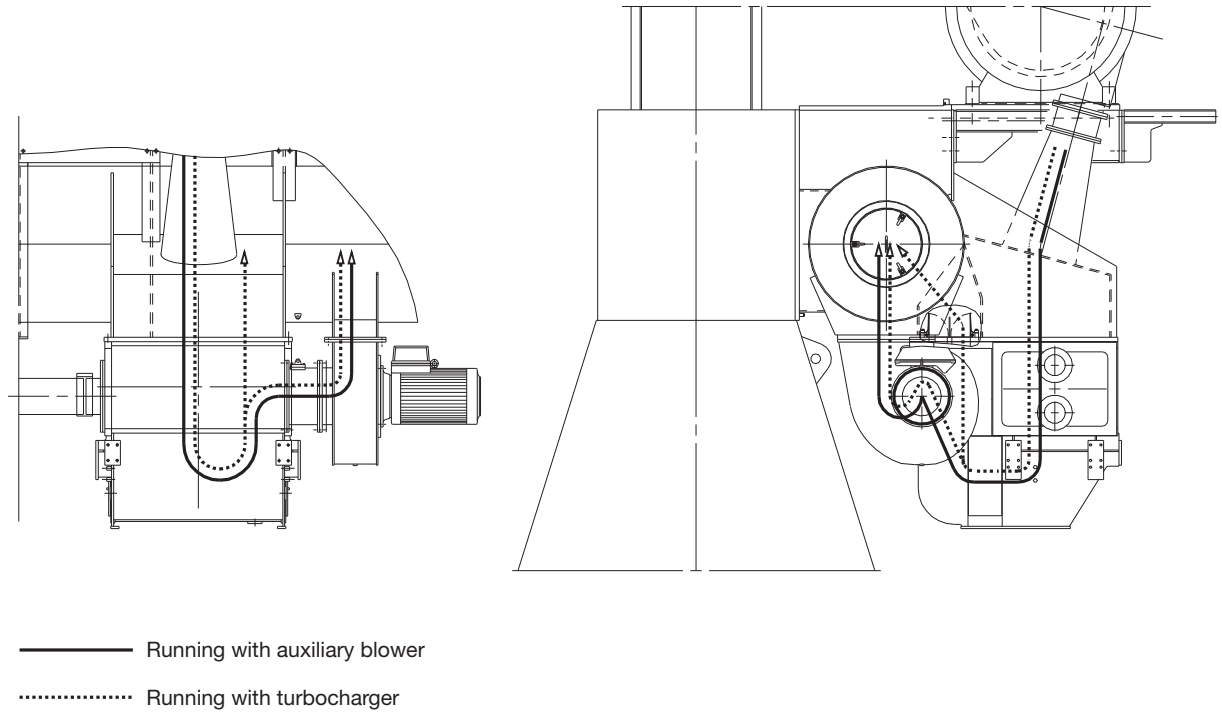

Fig. 14.02.01: Scavenge air system

Control of the Auxiliary Blowers

The control system for the auxiliary blowers is integrated in the Engine Control System. The auxiliary blowers can be controlled in either automatic (default) or manual mode.

In automatic mode, the auxiliary blowers are started sequentially at the moment the engine is commanded to start. During engine running, the blowers are started and stopped according to preset scavenge air pressure limits.

When the engine stops, the blowers are stopped after 10 minutes to prevent overheating of the blowers. When a start is ordered, the blower will be started in the normal sequence and the actual start of the engine will be delayed until the blowers have started.

In manual mode, the blowers can be controlled individually from the ECR (Engine Control Room) panel irrespective of the engine condition.

Referring to Fig. 14.02.02, the Auxiliary Blower Starter Panels control and protect the Auxiliary Blower motors, one panel with starter per blower.

The starter panels with starters for the auxiliary blower motors are not included, they can be ordered as an option: 4 55 653. (The starter panel design and function is according to MAN Diesel's diagram, however, the physical layout and choice of components has to be decided by the manufacturer).

Heaters for the blower motors are available as an option: 4 55 155.

Scavenge air cooler requirements

The data for the scavenge air cooler is specified in the description of the cooling water system chosen.

For further information, please refer to our publication titled:

Influence of Ambient Temperature Conditions

The publication is available at www.mandieselturbo.com under 'Products' → 'Marine Engines & Systems' → 'Low Speed' → 'Technical Papers'.

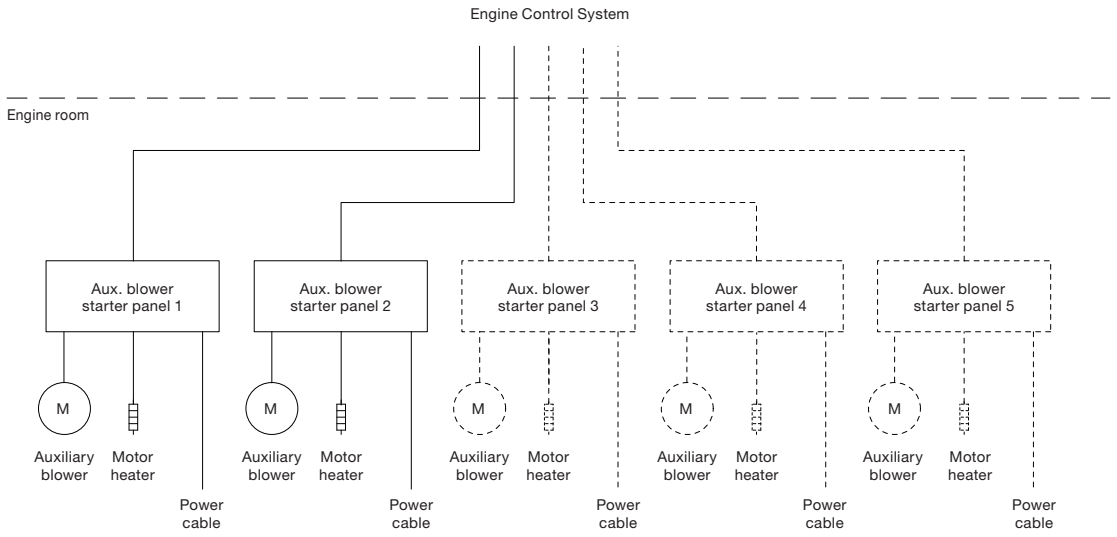

178 61 30-2.0

Fig. 14.02.02: Diagram of auxiliary blower control system

Scavenge Air Pipes

Please note that the information is to be found in the Project Guide for the relevant engine type.

Electric Motor for Auxiliary Blower

Please note that the information is to be found in the Project Guide for the relevant engine type.

Scavenge Air Cooler Cleaning System

The air side of the scavenge air cooler can be cleaned by injecting a grease dissolving media through 'AK' to a spray pipe arrangement fitted to the air chamber above the air cooler element.

Drain from water mist catcher

Sludge is drained through 'AL' to the drain water collecting tank and the polluted grease dissolvent returns from 'AM', through a filter, to the chemical cleaning tank. The cleaning must be carried out while the engine is at standstill.

Dirty water collected after the water mist catcher is drained through 'DX' and led to the bilge tank via an open funnel, see Fig. 14.05.02.

The 'AL' drain line is, during running, used as a permanent drain from the air cooler water mist catcher. The water is led through an orifice to prevent major losses of scavenge air.

The system is equipped with a drain box with a level switch, indicating any excessive water level.

The piping delivered with and fitted on the engine is shown in Fig 14.05.01.

Auto Pump Overboard System

It is common practice on board to lead drain water directly overboard via a collecting tank. Before pumping the drain water overboard, it is recommended to measure the oil content. If above 15ppm, the drain water should be lead to the clean bilge tank / bilge holding tank.

If required by the owner, a system for automatic disposal of drain water with oil content monitoring could be built as outlined in Fig. 14.05.02.

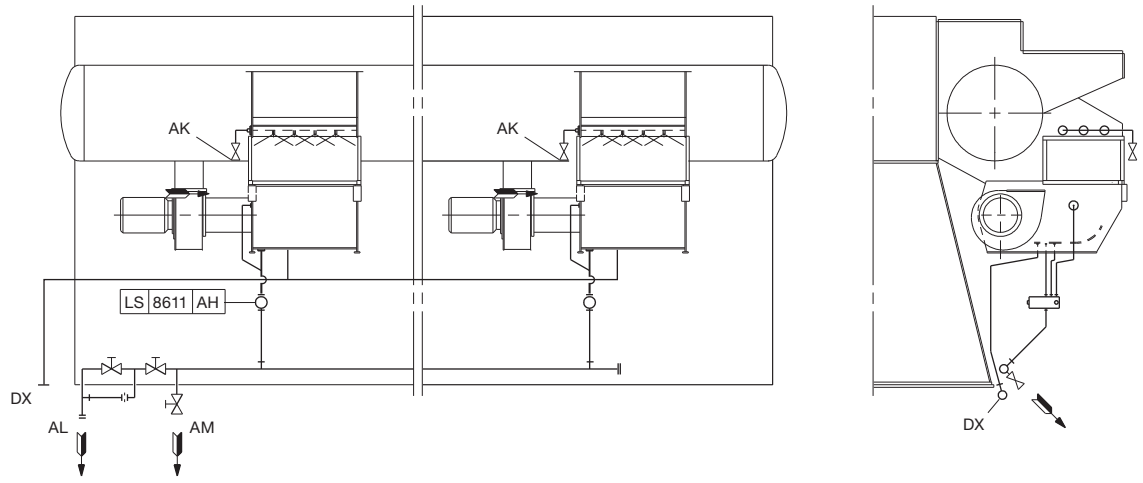

The letters refer to list of 'Counterflanges'
The item no refer to 'Guidance values automation'

178 56 35-4.2

Fig. 14.05.01: Air cooler cleaning pipes

Auto Pump Overboard System

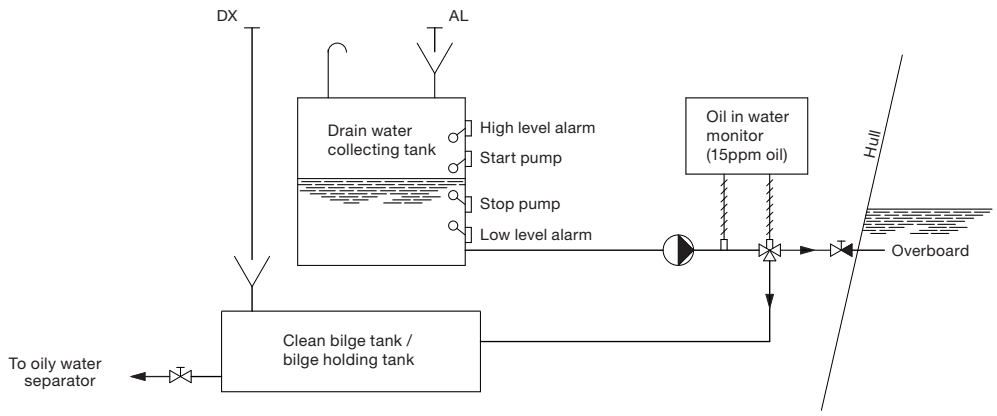

079 21 94-1.0.0c

Fig. 14.05.02: Suggested automatic disposal of drain water, if required by owner (not a demand from MAN Diesel)

Air Cooler Cleaning Unit

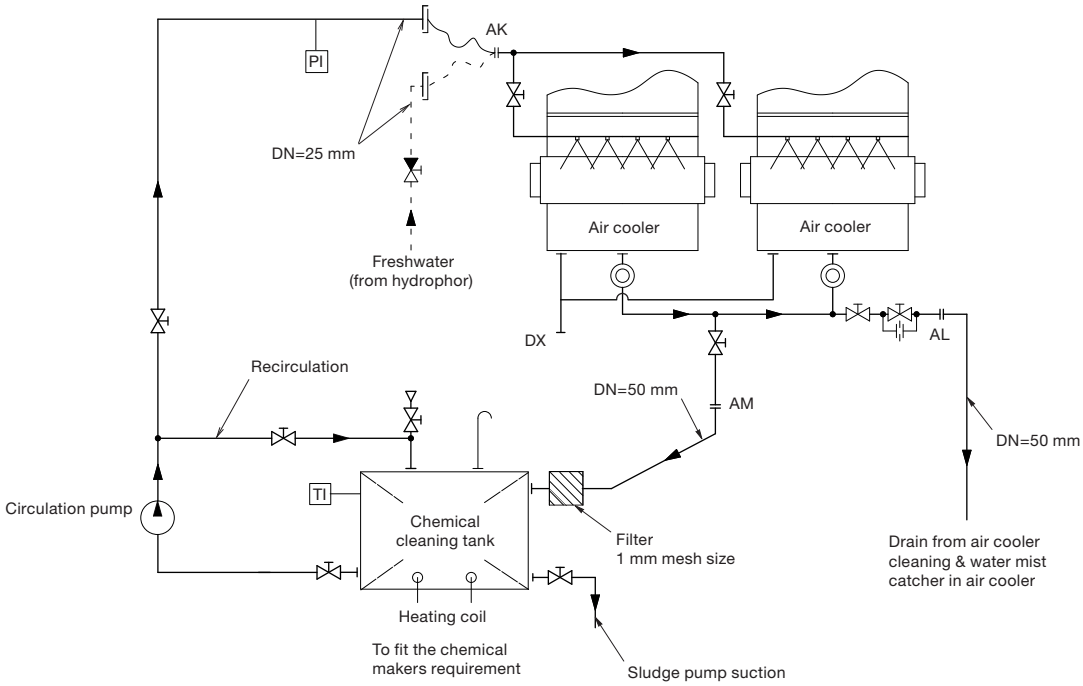

The letters refer to list of ‘Counterflanges‘

Information on tank capacity is to be found in the Project Guide for the relevant engine type.

079 21 94-1.0.0a

Fig. 14.05.03: Air cooler cleaning system with Air Cooler Cleaning Unit, option: 4 55 665

Scavenge Air Box Drain System

The scavenge air box is continuously drained through 'AV' to a small pressurised drain tank, from where the sludge is led to the sludge tank. Steam can be applied through 'BV', if required, to facilitate the draining. See fig. 14.06.01.

The continuous drain from the scavenge air box must not be directly connected to the sludge tank owing to the scavenge air pressure. The pressurised drain tank must be designed to withstand full scavenge air pressure and, if steam is applied, to withstand the steam pressure available.

The system delivered with and fitted on the engine is shown in Fig. 14.03.02 'Scavenge air space, drain pipes'.

Further information on number of cylinders and capacity of drain tank

The information is to be found in the Project Guide for the relevant engine type.

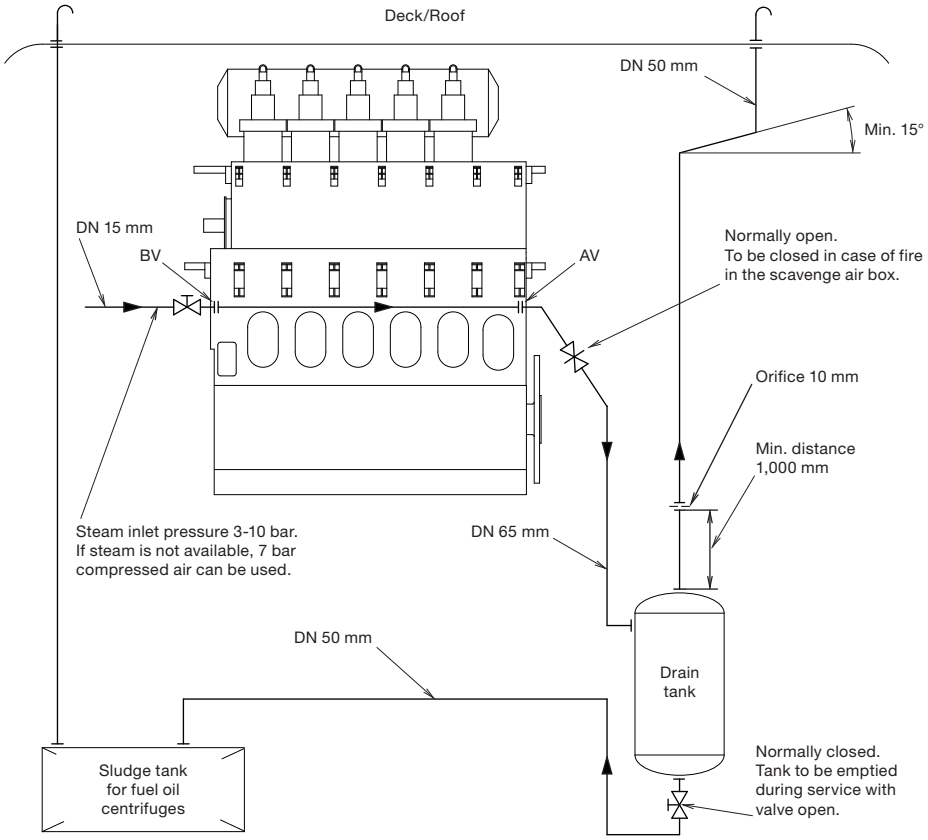

The letters refer to list of 'Counterflanges'

079 61 03-0.2.0

Fig. 14.06.01: Scavenge air box drain system

Fire Extinguishing System for Scavenge Air Space

Fire in the scavenge air space can be extinguished by steam, this being the standard version, or, optionally, by water mist or CO_2.

The external system, pipe and flange connections are shown in Fig. 14.07.01, comprising:

'Fire extinguishing system for scavenge air space',
- basic: 4 55 140 Steam
- or option: 4 55 142 Water mist
- or option: 4 55 143 CO_2

The corresponding internal system fitted on the engine is shown in Fig. 14.07.02, comprising:

'Fire extinguishing in scavenge air space (steam)'
or
'Fire extinguishing in scavenge air space (water mist)' or
'Fire extinguishing in scavenge air space (CO_2)'.

Further information on Steam, Freshwater and CO_2 test pressure and quantities

The information is to be found in the Project Guide for the relevant engine type.

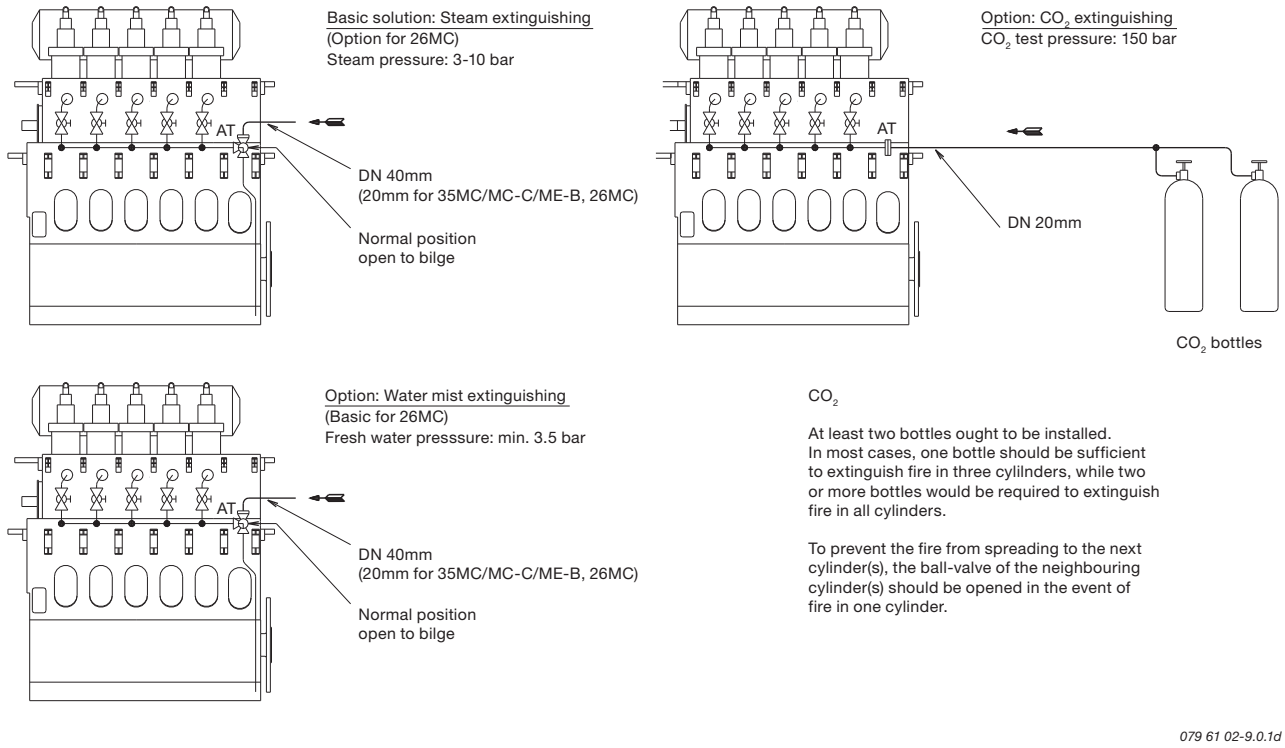

The letters refer to list of 'Counterflanges'

Fig. 14.07.01: Fire extinguishing system for scavenge air space

Fire Extinguishing Pipes in Scavenge Air Space

General design (except K90MC-C6/7, K80MC-C6, S60MC6):

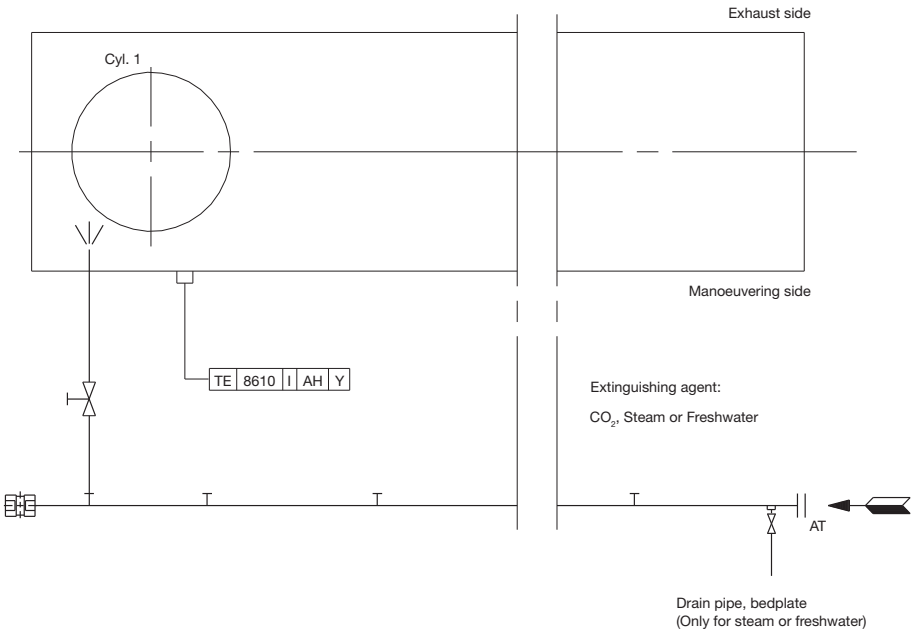

126 40 81-0.6.0a

K90MC-C6/7, K80MC-C6, S60MC6:

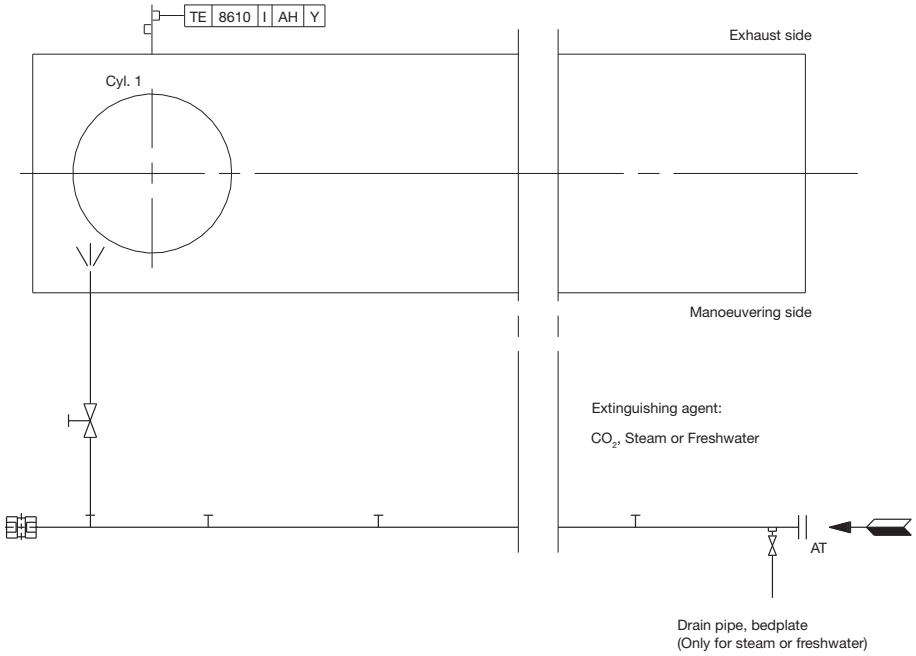

126 40 81-0.6.0b

The letters refer to list of 'Counterflanges'

Fig. 14.07.02: Fire extinguishing pipes in scavenge air space

Exhaust Gas

15

Exhaust Gas System

The exhaust gas is led from the cylinders to the exhaust gas receiver where the fluctuating pressures from the cylinders are equalised and from where the gas is led further on to the turbochargers at a constant pressure. See Fig. 15.01.01.

Compensators are fitted between the exhaust valve housings and the exhaust gas receiver and between the receiver and the turbocharger. A protective grating is placed between the exhaust gas receiver and the turbocharger. The turbocharger is fitted with a pick-up for monitoring and remote indication of the turbocharger speed.

The exhaust gas receiver and the exhaust pipes are provided with insulation, covered by steel plating.

Turbocharger arrangement and cleaning systems

The turbochargers are arranged on the exhaust side of the engine. However, some engines can be fitted with one turbocharger located on the aft end.

The engine is designed for the installation of MAN, ABB or MHI turbochargers, the number can be from one to four.

All makes of turbochargers are fitted with an arrangement for soft blast cleaning of the turbine side. Water washing of the compressor side is either fitted or available as an option for some turbochargers as indicated in Figs. 15.02.02 - 15.02.04.

Further information is found in the Project Guide for the relevant engine.

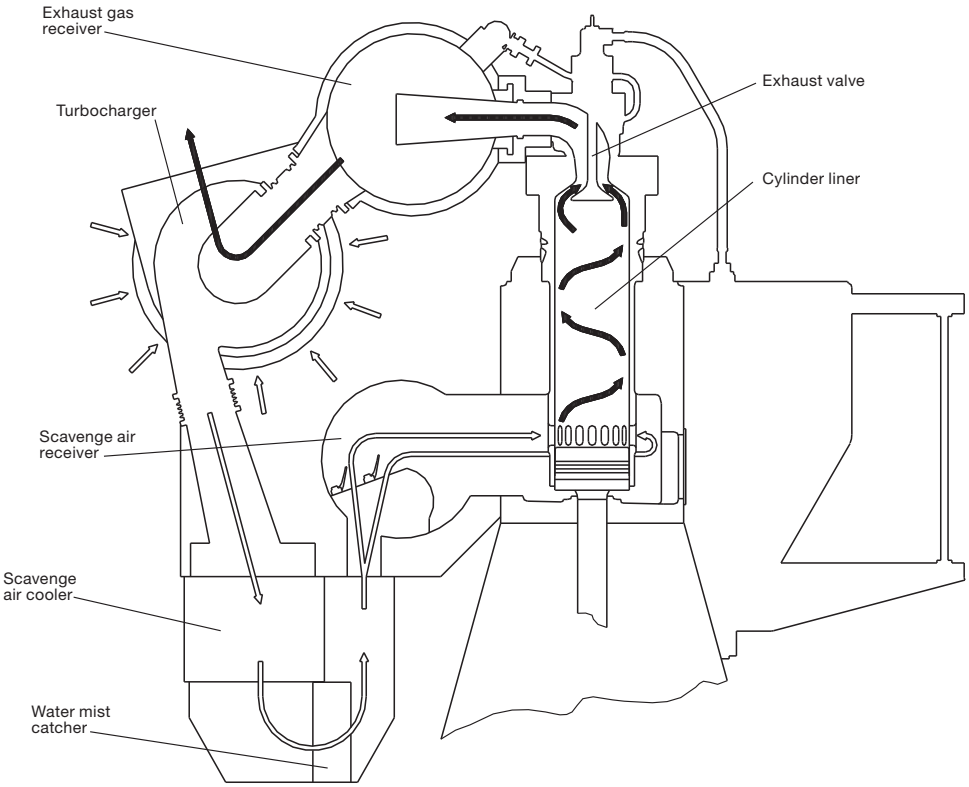

178 07 27-4.1

Fig. 15.01.01: Exhaust gas system on engine

Exhaust Gas Pipes

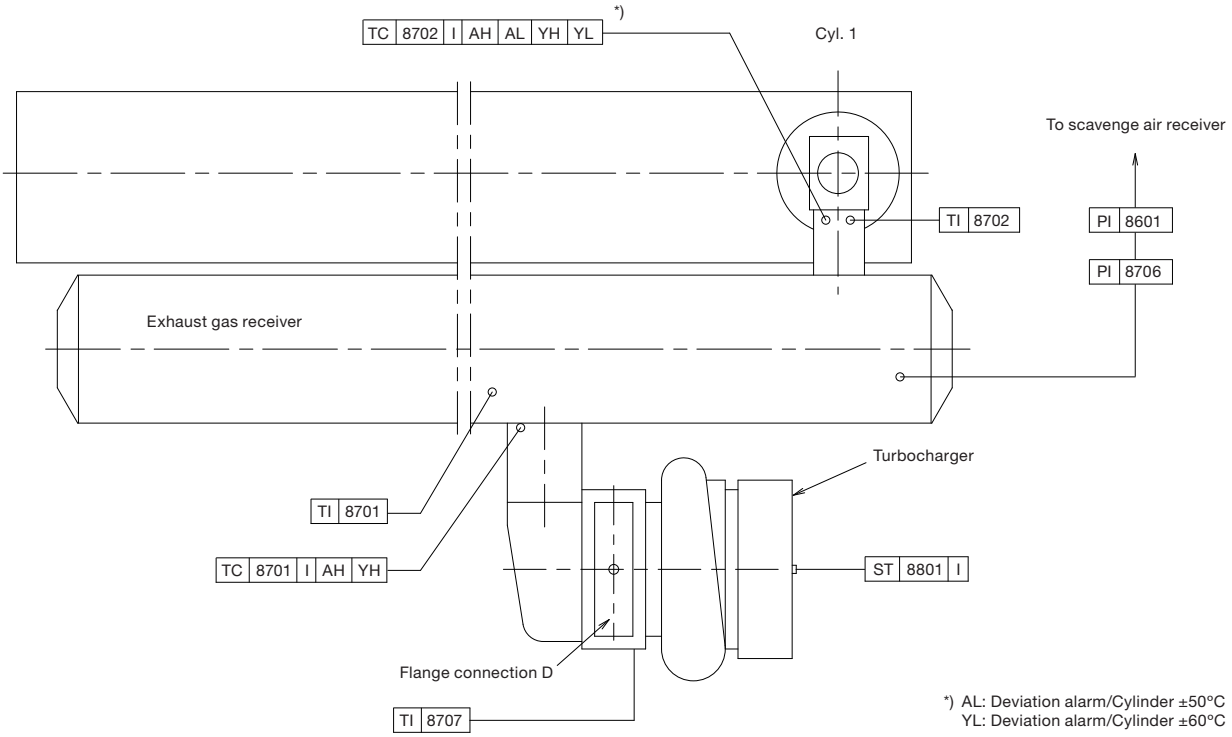

The letters refer to list of 'Counterflanges'
The item no. refer to 'Guidance Values Automation'

121 15 27-9.2.0

Fig. 15.02.01: Exhaust gas pipes

Exhaust Gas Pipes

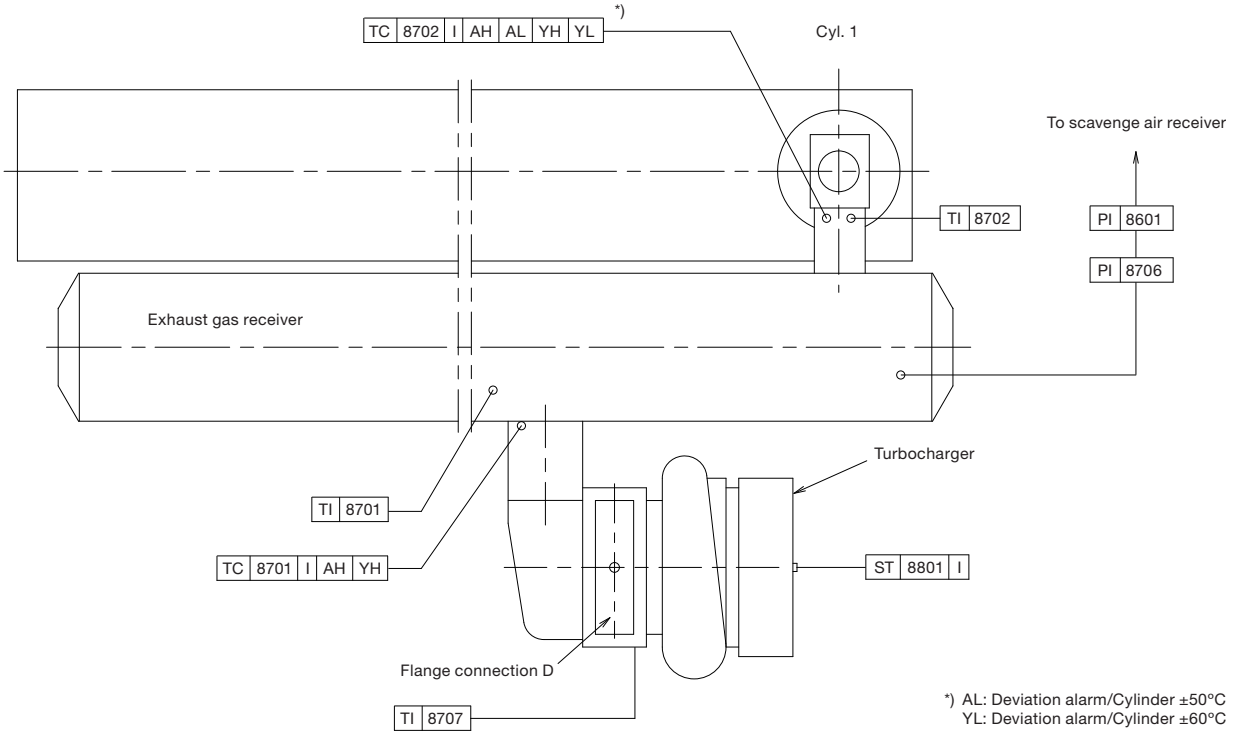

The letters refer to list of 'Counterflanges'
The item no. refer to 'Guidance Values Automation'

121 15 27-9.2.0

Fig. 15.02.01a: Exhaust gas pipes, with turbocharger located on exhaust side of engine, option 4 59 122

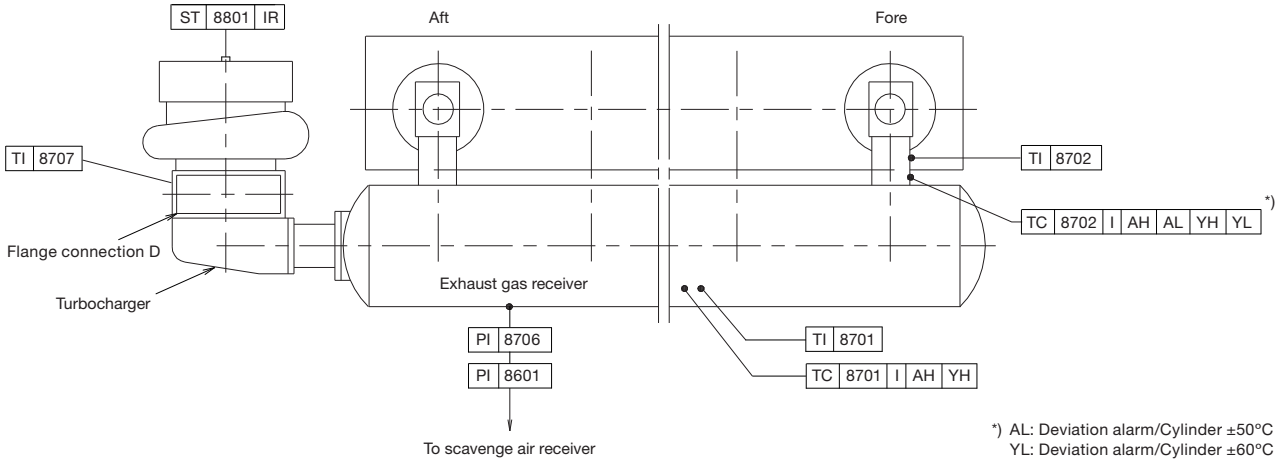

The letters refer to list of 'Counterflanges'
The item no. refer to 'Guidance Values Automation'
The piping is delivered with and fitted onto the engine

178 38 69-2.2

Fig.15.02.01b: Exhaust gas pipes, with turbocharger located on aft end of engine, option 4 59 124

Cleaning Systems

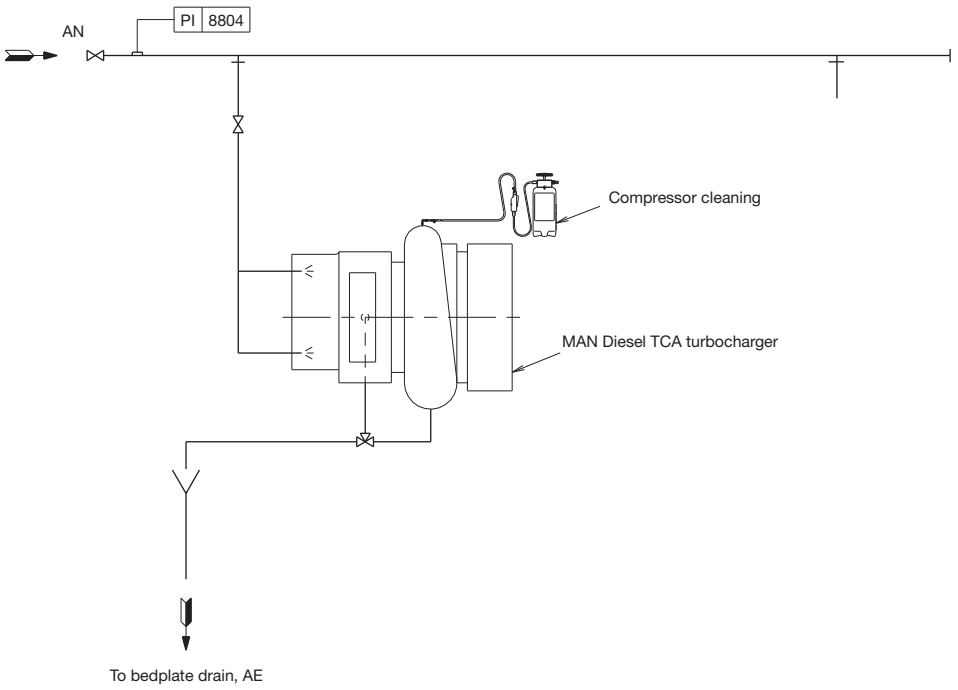

121 15 21-8.0.0

Fig. 15.02.02: MAN Diesel TCA turbocharger, water washing of turbine side

Cleaning Systems

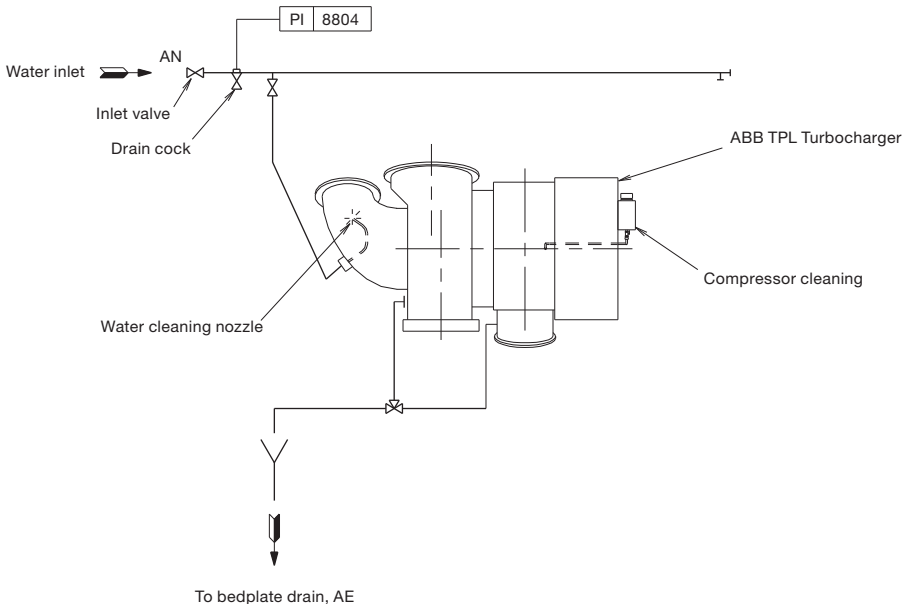

121 36 75-1.0.0

Fig. 15.02.03: Water washing of turbine and compressor sides for ABB, TPL turbochargers

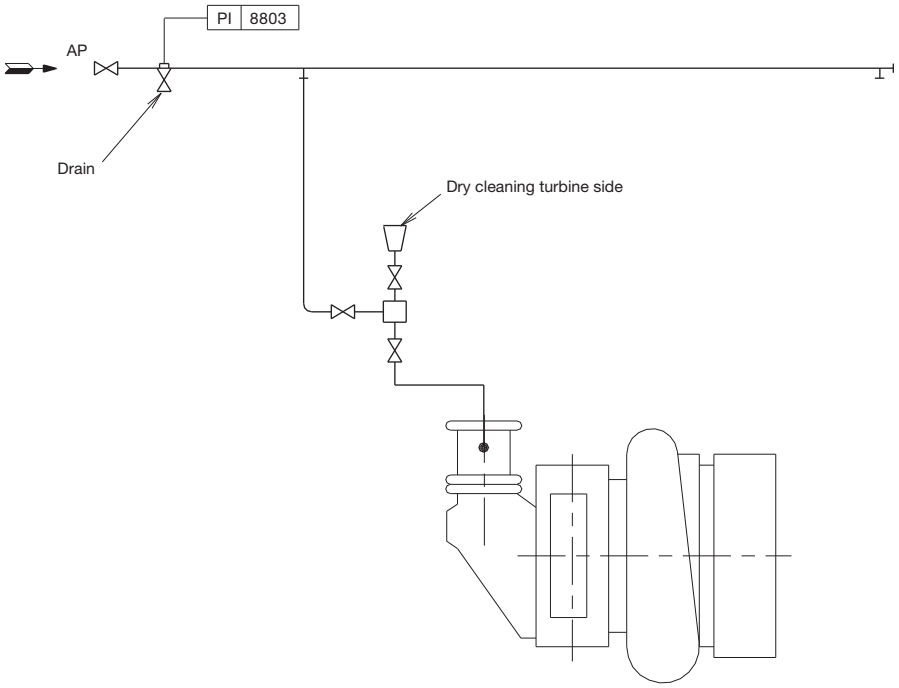

126 40 93-0.2.0

Fig. 15.02.04: Soft blast cleaning of turbine side

Exhaust Gas System for Main Engine

At the specified MCR of the engine, the total back-pressure in the exhaust gas system after the turbocharger (as indicated by the static pressure measured in the piping after the turbocharger) must not exceed 350 mm WC (0.035 bar).

In order to have a back-pressure margin for the final system, it is recommended at the design stage to initially use a value of about 300 mm WC (0.030 bar).

The actual back-pressure in the exhaust gas system at specified MCR depends on the gas velocity, i.e. it is proportional to the square of the exhaust gas velocity, and hence inversely proportional to the pipe diameter to the 4th power. It has by now become normal practice in order to avoid too much pressure loss in the pipings to have an exhaust gas velocity at specified MCR of about 35 m/sec, but not higher than 50 m/sec.

Exhaust gas piping system for main engine

The exhaust gas piping system conveys the gas from the outlet of the turbocharger(s) to the atmosphere.

The exhaust piping is shown schematically in Fig. 15.04.01.

The exhaust system for the main engine comprises:

- Exhaust gas pipes
- Exhaust gas boiler
- Silencer
- Spark arrester (if needed)
- Expansion joints (compensators)
- Pipe bracings.

In connection with dimensioning the exhaust gas piping system, the following parameters must be observed:

- Exhaust gas flow rate
- Exhaust gas temperature at turbocharger outlet
- Maximum pressure drop through exhaust gas system
- Maximum noise level at gas outlet to atmosphere
- Maximum force from exhaust piping on turbocharger(s)
- Sufficient axial and lateral elongation ability of expansion joints
- Utilisation of the heat energy of the exhaust gas.

Items that are to be calculated or read from tables are:

- Exhaust gas mass flow rate, temperature and maximum back pressure at turbocharger gas outlet
- Diameter of exhaust gas pipes
- Utilisation of the exhaust gas energy
- Attenuation of noise from the exhaust pipe outlet
- Pressure drop across the exhaust gas system
- Expansion joints.

Components of the Exhaust Gas System

Exhaust gas compensator after turbocharger

When dimensioning the compensator for the expansion joint on the turbocharger gas outlet transition piece, the exhaust gas piece and components are to be so arranged that the thermal expansions are absorbed by expansion joints. The heat expansion of the pipes and the components is to be calculated based on a temperature increase from 20 °C to 250 °C.

Exhaust gas boiler

Engine plants are usually designed for utilisation of the heat energy of the exhaust gas for steam production or for heating the thermal oil system. The exhaust gas passes an exhaust gas boiler which is usually placed near the engine top or in the funnel.

It should be noted that the exhaust gas temperature and flow rate are influenced by the ambient conditions, for which reason this should be considered when the exhaust gas boiler is planned.

At specified MCR, the maximum recommended pressure loss across the exhaust gas boiler is normally 150 mm WC.

This pressure loss depends on the pressure losses in the rest of the system as mentioned above. Therefore, if an exhaust gas silencer/spark arrester is not installed, the acceptable pressure loss across the boiler may be somewhat higher than the max. of 150 mm WC, whereas, if an exhaust gas silencer/spark arrester is installed, it may be necessary to reduce the maximum pressure loss.

The above mentioned pressure loss across the exhaust gas boiler must include the pressure losses from the inlet and outlet transition pieces.

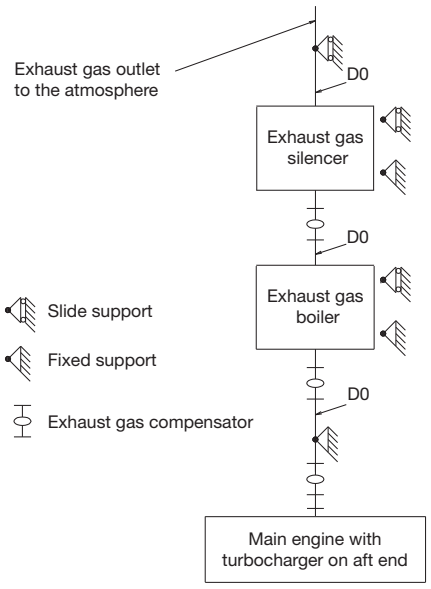

178 42 78-3.2

Fig. 15.04.01a: Exhaust gas system, one turbocharger

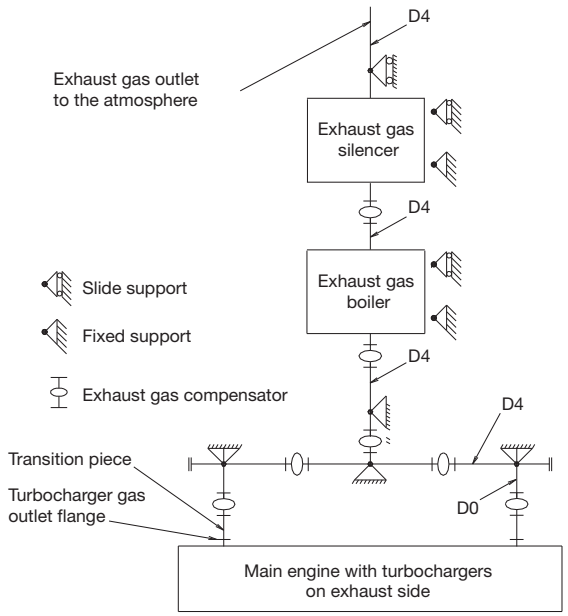

178 33 46-7.4

Fig. 15.04.01b: Exhaust gas system, two or more TCs

Exhaust gas silencer

The typical octave band sound pressure levels from the diesel engine's exhaust gas system – at a distance of one meter from the top of the exhaust gas uptake – are available on request.

The need for an exhaust gas silencer can be decided based on the requirement of a maximum permissible noise level at a specific position.

The exhaust gas noise data is valid for an exhaust gas system without boiler and silencer, etc.

The noise level is at nominal MCR at a distance of one metre from the exhaust gas pipe outlet edge at an angle of 30° to the gas flow direction.

For each doubling of the distance, the noise level will be reduced by about 6 dB (far-field law).

When the noise level at the exhaust gas outlet to the atmosphere needs to be silenced, a silencer can be placed in the exhaust gas piping system after the exhaust gas boiler.

The exhaust gas silencer is usually of the absorption type and is dimensioned for a gas velocity of approximately 35 m/s through the central tube of the silencer.

An exhaust gas silencer can be designed based on the required damping of noise from the exhaust gas given on the graph.

In the event that an exhaust gas silencer is required – this depends on the actual noise level requirement on the bridge wing, which is normally maximum 60-70 dB(A) – a simple flow silencer of the absorption type is recommended. Depending on the manufacturer, this type of silencer normally has a pressure loss of around 20 mm WC at specified MCR.

Spark arrester

To prevent sparks from the exhaust gas being spread over deck houses, a spark arrester can be fitted as the last component in the exhaust gas system.

It should be noted that a spark arrester contributes with a considerable pressure drop, which is often a disadvantage.

It is recommended that the combined pressure loss across the silencer and/or spark arrester should not be allowed to exceed 100 mm WC at specified MCR. This depends, of course, on the pressure loss in the remaining part of the system, thus if no exhaust gas boiler is installed, 200 mm WC might be allowed.

Engine Control System

16

Engine Control System ME-GI/ME-C-GI

The Engine Control System for the ME-GI/ME-C-GI engine is prepared for conventional remote control, having an interface to the Bridge Control system and the Local Operating Panel (LOP).

The LOP replaces the Engine Side Control of the MC engines.

ME-GI/ME-C-GI Engine Operating Modes

The Electronic Control System of the ME-GI/ME-C-GI engines is designed for application of four different engine operating modes.

What are operating modes?

An operating mode is a complete set of engine parameters for: injection profile (NOx emission / SFOC optimisation and cross-over effects), injection timing (Maximum cylinder pressure), exhaust valve opening (blow-back), exhaust valve closing (compression ratio), covering the complete engine load and speed ranges.

These data are designed to fulfil the requirement of shipowner, yard, engine builder and engine designer.

All -GI engines will be delivered with standard dual fuel operating mode and HFO operating mode set-up and one optional mode:

1) **Dual Fuel Economy Operating Mode,** to Comply with IMO NO_x emission limitations, EoD 4 06 066.

   The dual fuel operating mode is designed to apply for an engine load above 30%. Above 30% engine load, gas can be supplied to an engine as main fuel on top of a minimum of 5% pilot oil, which is necessary to control the timing of the combustion, Fig. 16.01.01.

   Between 30% and 110% load the operator can choose the ratio of fuel oil and gas, depending of available boil-off gas, Fig. 16.01.01.

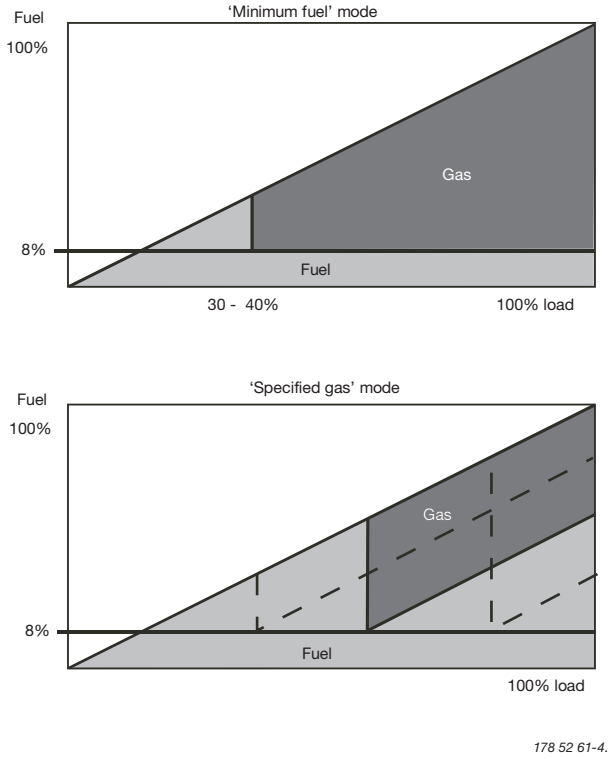

Fig. 16.01.01: Fuel type modes - MAN B&W two-stroke dual fuel low speed diesel

This operating mode is designed to give the best possible SFOC at all normal operating conditions, ensuring optimal operating economy in the complete range between 60 to 100% engine load.

A typical example for expected engine performance parameters is given in Fig.1.05.01, clearly indicating the high compression and maximum pressures in the high load range, ensuring optimal SFOC.

2) **Low NO_x emission mode**, option: 4 06 062.
This operating mode is designed to reduce NO_x emission of the engine in the complete engine operating range, with special attention to NO_x emission reduction at 75% engine load. This special attention is due to the fact that all known NO_x emission legislations are concentrated on 75% engine load.

Operation in Low 'NO_x emission mode' will ensure a reduction of the IMO NO_x emission figure of 20-30% compared to the IMO NO_x emission figure for operation in 'Fuel economy mode'.

A typical example of expected engine performance parameters is given in Fig. 1.05.01.

Compared with the performance curves for the 'Fuel economy mode' it can be noticed that p_{max} and p_{comp} are significantly lower and that the SFOC is somewhat higher.

The 'NO_x emission mode' can be used in connection with fulfilling local legislation or in connection with voluntary agreement of NO_x emission reduction countermeasures.

The remaining operating modes are open for special designs fulfilling special requirements such as:

3) **Part load emission mode**, option: 4 06 063.
A special mode which could be relevant in connection with vessels operating at part load for extended periods of the planned schedule.

4) **Special emission operating mode**, option: 4 06 064.
An operating mode that ensures fulfilment of special emission requirements in local areas where the vessel has its normal planned schedule.

Change-over between operating modes

The engine control system will contain all applied operating modes, and change-over from one operating mode to another can be performed by pushing a button on the MOP (Main Operating Panel).

The Engine Control System will, within a few seconds, recognise the change-over requirements and ensure that the new mode parameters will be put into force immediately.

IMO NO_x Certification

All engine operating modes have to be certified under normal testing procedures.

Main Operating Panel (MOP)

In the engine control room a MOP screen is located, which is a Personal Computer with a touch screen as well as a trackball from where the engineer can carry out engine commands, adjust the engine parameters, select the running modes, and observe the status of the control system.

A conventional marine approved PC is also located in the engine control room serving as a back-up unit for the MOP.

The Engine Control System primarily consists of the below mentioned Multi Purpose Controllers (MPC) shown in Fig. 16.02.01, the mechanical-hydraulic system shown in Fig. 16.01.05 and the pneumatic system, shown in Fig. 16.01.06.

Engine Interface Control Unit (EICU)

The EICUs installed in the engine control room perform such tasks as interface with the surrounding control systems, See Fig. 16.02.01. The two redundant EICU units operate in parallel.

Engine Control Unit (ECU)

For redundancy purposes, the control system comprises two ECUs operating in parallel and performing the same task, one being a hot stand-by for the other. If one of the ECUs fail, the other unit will take over the control without any interruption.

The ECUs perform such tasks as:

- Speed governor functions, start/stop sequences, timing of fuel injection, timing of exhaust valve activation, timing of starting valves, etc.
- Continuous running control of auxiliary functions handled by the ACUs
- Alternative running modes and programs.

Gas Control System

The gas control system for the -GI prime mover is an 'interaction' between the traditional boil-off gas (BOG) handling, the well-known high-pressure compressor and the engine technology.

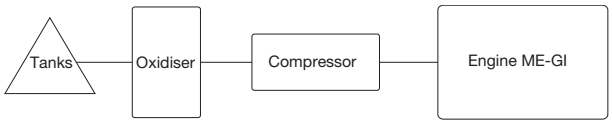

178 52 63-8.0

Fig. 16.01.03: System configuration, example ME-GI

When the gas evaporates, the boil-off gas increases the pressure in t he gas tanks and therefore has to be removed. This gas contains methane and nitrogen.

In order to boost the pressure for further working, a turbo compressor is used to activate a pressure at approximately 2 bar.

The above-mentioned flow of the boil-off gas is the traditional flow which has been used in gas carriers for years.

In order to burn the boil-off gas in a high-pressure gas engine, a reciprocating compressor has to be installed.

These compressors are well-known and used with various kinds of gases, delivered in units including all internal control of the system, which operates together with engines.

Further the control system has sufficient ability to adjust optimal flow to engines if the condition of the boil-off gas, to the compression or requirements for the engine be changed. These gas compressors use control of by-pass at engine part load, all depending of the application necessary; please see the gas supply systems, Section 7.07.

The compressors are capable of operating at engine shutdown and of manoeuvring the system without any delay or other difficulties, may appear for the operator. The operator will, in practice, operate the -GI engine as an ordinary HFO ME engine.

Engine control and safety system

The -GI control and safety system is built as an add-on system to the ME control and safety system. It hardly requires any changes to the ME system, and it is consequently very simple to implement.

The principle of the gas mode control system is that it is controlled by the error between the wanted discharge pressure and the actual measured discharge pressure from the compressor system. Depending on the size of this error the amount of fuel-gas (or of pilot oil) is either increased or decreased.

If there is any variation over time in the calorific value of the fuel-gas it can be measured on the rpm of the crankshaft. Depending on the value measured, the amount of fuel-gas is either increased or decreased.

The change in the calorific value over time is slow in relation to the rpm of the engine. Therefore the required change of gas amount between injections is relatively small.

To make the engine easy to integrate with different suppliers of external gas delivering systems, the fuel gas control system is made almost 'stand alone'. The exchanged signals are limited to Stop, Go, ESD, and pressure set-point signals.

ME-GI/ME-C-GI operational profiles/gas stream

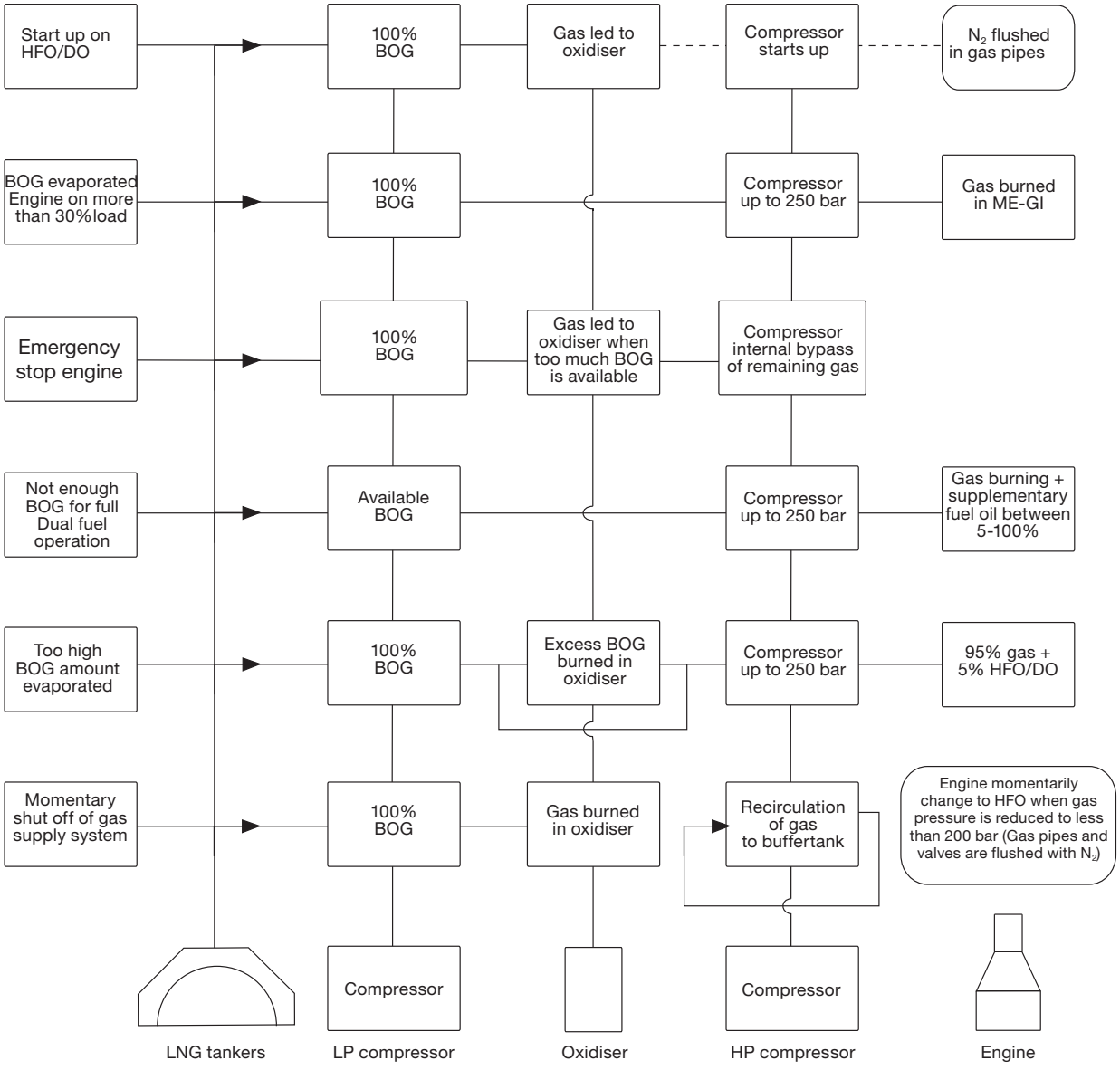

178 52 62-6.2

Fig. 16.01.04: ME-GI/ME-C-GI operational profiles/gas stream

Cylinder Control Unit (CCU)

The control system includes one CCU per cylinder. The CCU controls the electronic exhaust Valve Activation (FIVA) and the Starting Air Valves (SAV), in accordance with the commands received from the ECU.

All the CCUs are identical, and in the event of a failure of the CCU for one cylinder only this cylinder will automatically be put out of operation.

It should be noted that any electronic part could be replaced without stopping the engine, which will revert to normal operation immediately after the replacement of the defective unit.

Auxiliary Control Unit (ACU)

The control of the auxiliary equipment on the engine is normally divided among three ACUs so that, in the event of a failure of one unit, there is sufficient redundancy to permit continuous operation of the engine.

The ACUs perform the control of the auxiliary blowers, the control of the electrically and engine driven hydraulic oil pumps of the Hydraulic Power Supply (HPS) unit, etc.

Local Operating Panel (LOP)

In normal operating the engine can be controlled from either the bridge or from the engine control room.

Alternatively, the LOP can be activated. This redundant control is to be considered as a substitute for the previous Engine Side Control console mounted directly onto the MC engine.

The LOP is as standard placed on the engine.

From the LOP, the basic functions are available, such as starting, engine speed control, stopping, reversing, and the most important engine data are displayed.

Hydraulic Power Supply (HPS)

The purpose of the HPS unit is to deliver the necessary high pressure hydraulic oil flow to the hydraulic cylinder units (HCU) on the engine at the required pressure (approx. 300 bar) during start-up as well as in normal service.

As hydraulic medium, normal lubricating oil is used, and it is in the standard execution taken from the main lubricating oil system of the engine.

The HPS unit can be driven either mechanically from the engine crankshaft, see Fig. 16.01.05.

The multiple pump configuration with standby pumps ensures redundancy with regard to the hydraulic power supply. The control of the engine driven pumps and electrical pumps are divided between the three ACUs.

The high pressure pipes between the HPS unit and the HCU are of the double walled type, having a leak detector. Emergency running is possible using the outer pipe as pressure containment for the high pressure oil supply.

The sizes and capacities of the HPS unit depend on the engine type. Further details about the lubricating oil/hydraulic oil system can be found in Chapter 8.

Mechanical-hydraulic System with Hydraulic Power Supply Unit on Engine

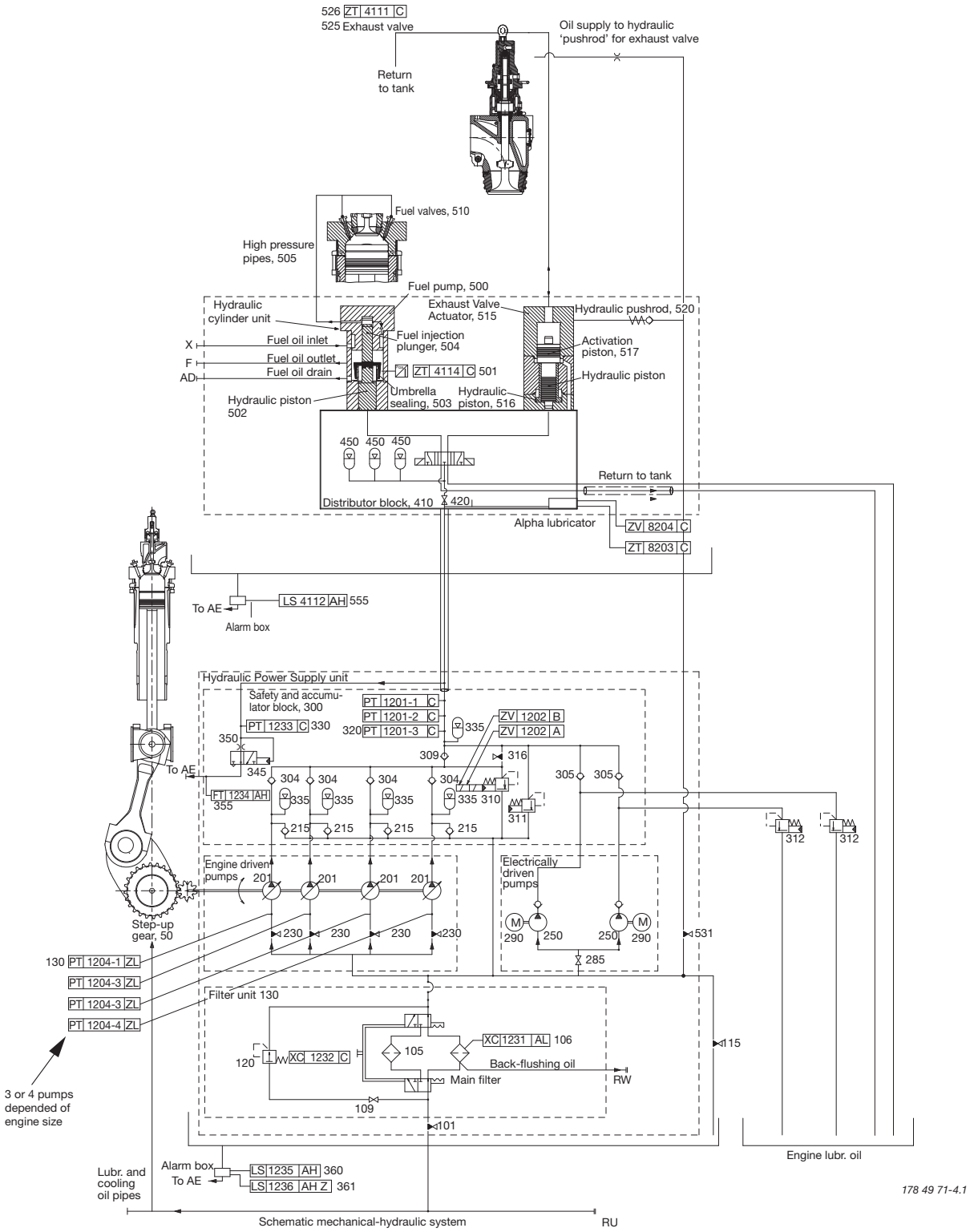

Fig. 16.01.05: Mechanical-hydraulic System with Hydraulic Power Supply Unit on Engine

Mechanical-hydraulic System with Hydraulic Power Supply Unit in Ship

This section is available on request

Engine Control System Interface to Surrounding Systems

To support the navigator, the vessels are equipped with a ship control system, which includes subsystems to supervise and protect the main propulsion engine.

The advanced Engine Control System (ECS) developed for the -GI engines includes the governor function, i.e. the engine speed control and the engine reversing, as well as specific new functions only applicable on the -GI engine, and has interface to other external systems as indicated in Figs. 16.01.06 and 16.01.07.

Alarm system

The alarm system has no direct effect on the ECS. The alarm alerts the operator of an abnormal condition.

The alarm system is an independent system, in general covering more than the main engine itself, and its task is to monitor the service condition and to activate the alarms if a normal service limit is exceeded.

The signals from the alarm sensors can be used for the slow down function as well as for remote indication.

Slow down system

Some of the signals given by the sensors of the alarm system are used for the 'Slow down request' signal to the ECS of the main engine.

Safety system

The engine safety system is an independent system with its respective sensors on the main engine, fulfilling the requirements of the respective classification society and MAN Diesel.

If a critical value is reached for one of the measuring points, the input signal from the safety system must cause either a cancellable or a non-cancellable shut down signal to the ECS.

The safety system must be compatible with the remote control system.

Telegraph system

This system enables the navigator to transfer the commands of engine speed and direction of rotation from the Bridge, the engine control room or the Local Operating Panel (LOP), and it provides signals for speed setting and stop to the ECS.

The engine control room and the LOP are provided with combined telegraph and speed setting units.

Remote Control system

The remote control system normally has two alternative control stations:

- the bridge control
- the engine control room control

The remote control system is to be delivered by an approved supplier and it must be compatible with the safety system.

Power Management System

The system handles the supply of electrical power onboard, i. e. the starting and stopping of the generating sets as well as the activation / deactivation of the main engine Shaft Generator (SG), - if fitted.

The normal function involves starting, synchronising, phasing-in, transfer of electrical load and stopping of the generators based on the electrical load of the grid on board.

The activation / deactivation of the SG is to be done within the engine speed range which fulfils the specified limits of the electrical frequency.

Auxiliary equipment system

The input signals for 'Auxiliary system ready' are given partly through the Remote Control system based on the status for:

- gas supply system
- fuel oil system
- lube oil system
- cooling water systems

and partly from the ECS itself:

- turning gear disengaged
- main starting valve 'open'
- control air valve for sealing air 'open'
- control air valve for air spring 'open'
- auxiliary blowers running
- hydraulic power supply ready.

Monitoring systems

In addition to the PMI system type PT/S off-line required for the installation of the ME engine, PMI on-line and CoCoS-EDS can be used to improve the monito-ring of the engine.

A description of the systems can be found in Chapter 18 of the Project Guide for the relevant engine.

Instrumentation

Chapter 18 in the Project Guide for the specific engine type includes lists of instrumentation for:

- The -GI engine
- The CoCoS-EDS on-line system
- The class requirements and MAN Diesel's requirements for alarms, slow down and shut down for Unattended Machinery Spaces

Engine and Compressor Interface

The needed gas compressor inlet engine varies from 200 to 250 bar, depending on the engine load.

Based on the speed / load setting signals coming from the -GI, the compressor control will regulate the gas pressure accordingly.

If the gas pressure inlet is not at the necessary pressure level, the engine will change over to a fuel oil operational mode.

ME Shut-down on Alarm System

In addition to the ME engine shutdown, the alarm system gas limitations for high / low gas pressure is incorporated in the engine control system as alarm for gas leakage in the piping and exhaust gas receiver and lack of pilot oil injection.

Compressor Control

The high gas compressor is provided with alarm and shut down in the internal control system.

All operating conditions are being monitored internally in the compressor such as cooling water, gas compressor's speed, etc.

Pneumatic Manoeuvring Diagram

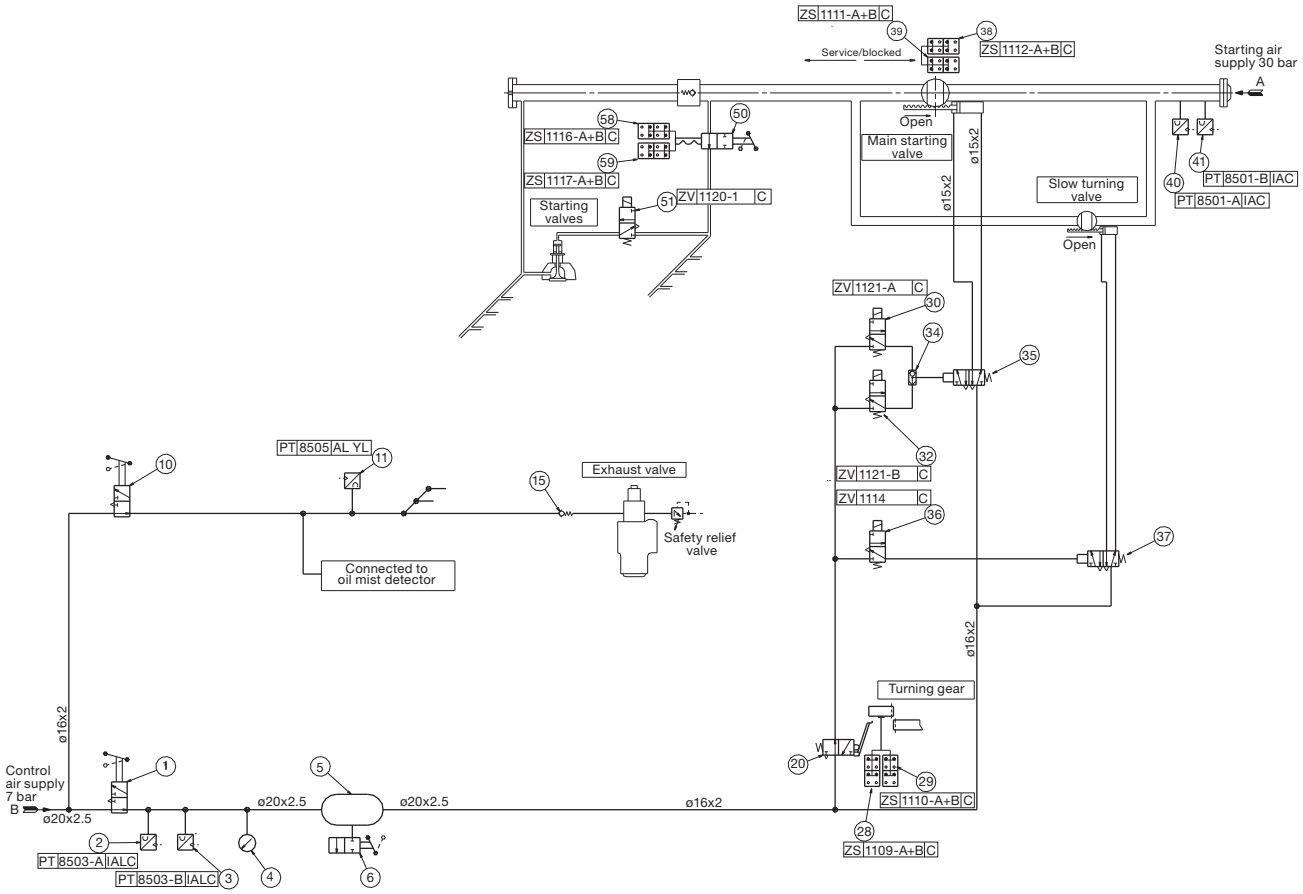

178 49 73-8.2

Fig. 16.01.06: Pneumatic Manoeuvring Diagram

ME-GI/ME-C-GI Control Equipment Installation

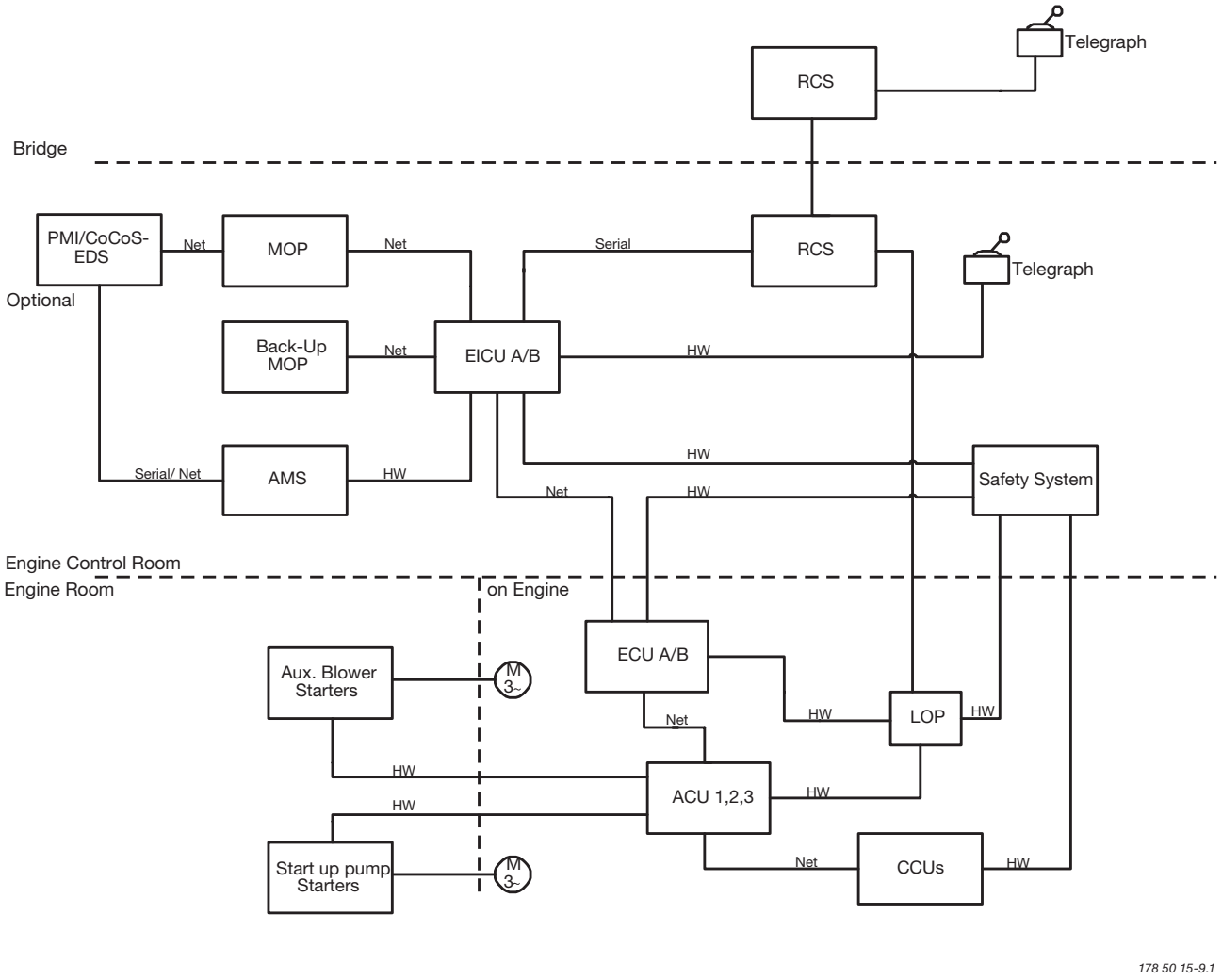

AMS	**A**larm and **M**onitoring **S**ystem	MPC	**M**ulti **P**urpose **C**ontrollers:
CoCos	**Co**mputer **Co**ntrolled **S**urveillance system	ACU	**A**uxiliary **C**ontrol **U**nit
ECS	**E**ngine **C**ontrol **S**ystem	CCU	**C**ylinder **C**ontrol **U**nit
EDS	**E**ngine **D**iagnostics **S**ystem	ECU	**E**ngine **C**ontrol **U**nit
LOP	**L**ocal **O**perating **P**anel	EICU	**E**ngine **I**nterface **C**ontrol **U**nit
MOP	**M**ain **O**perating **P**anel	RCS	**R**emote **C**ontrol **S**ystem

Fig. 16.01.07: Installation of ME-GI control equipment

Dual Fuel Control System

In addition to the above a special dual fuel control system is being developed to control the dual-fuel operation when the engine is operating on compressed gaseous fuels. See Fig. 16.02.01. The control system is the glue that ties all the dual fuel parts in the internal and the external system together and makes the engine run in gas mode.

As mentioned earlier the system is designed as an add-on system to the original ME control system. The consequence is that the Bridge panel, the Main Operating Panel (MOP) & the Local Operating Panel (LOP) will stay unchanged. All operations in gas mode are therefore performed from the engine room alone.

When the dual fuel control system is running the existing ME control and alarm system will stay in full operation.

Mainly for hardware reasons the control of the dual fuel operation is divided into:

- Plant control
- Fuel control
- Safety Control

Plant control

The task of the plant control is to handle the switch between the two stable states:

- Gas Safe Condition State (HFO only)
- Dual-Fuel State

The plant control can operate all the fuel gas equipment shown in Fig. 1.06.01. For the plant control to operate it is required that the Safety Control allows it to work otherwise the Safety Control will overrule and return to a Gas Safe Condition.

Fuel control

The task of the fuel control is to determine the fuel gas index and the pilot oil index when running in the three different modes shown in Fig. 16.01.01.

Safety control

The task of the safety system is to monitor:

- all fuel gas equipment and the related auxiliary equipment
- the existing shut down signal from the ME safety system.
- the cylinder condition for being in a condition allowing fuel gas to be injected.

If one of the above mentioned failures is detected then the Safety Control releases the fuel gas Shut Down sequence below:

The Shut down valve V4 and the master valve V1 will be closed. The ELGI valves will be disabled. The fuel gas will be blow out by opening valve V2 and finally the gas pipe system will be purged with inert gas. See also Fig. 7.00.01.

Architecture of the Dual Fuel Control System

Dual Fuel running is not essential for the manoeuvrability of the ship as the engine will continue to run on fuel oil if an unintended fuel gas stop occurs. The two fundamental architectural and design demands of the fuel gas Equipment are, in order of priority:

- Safety to personnel must be at least on the same level as for a conventional diesel engine
- A fault in the Dual Fuel equipment must cause stop of gas operation and change over to Gas Safe Condition.

Which to some extent complement each other.

The Dual Fuel Control System is designed to ‘fail to safe condition’. See Fig. 16.02.02. All failures detected during fuel gas running and failures of the control system itself will result in a fuel gas Stop / Shut Down and change over to fuel operation. Followed by blow out and purging of high pressure fuel gas pipes which releases all gas from the entire gas supply system.

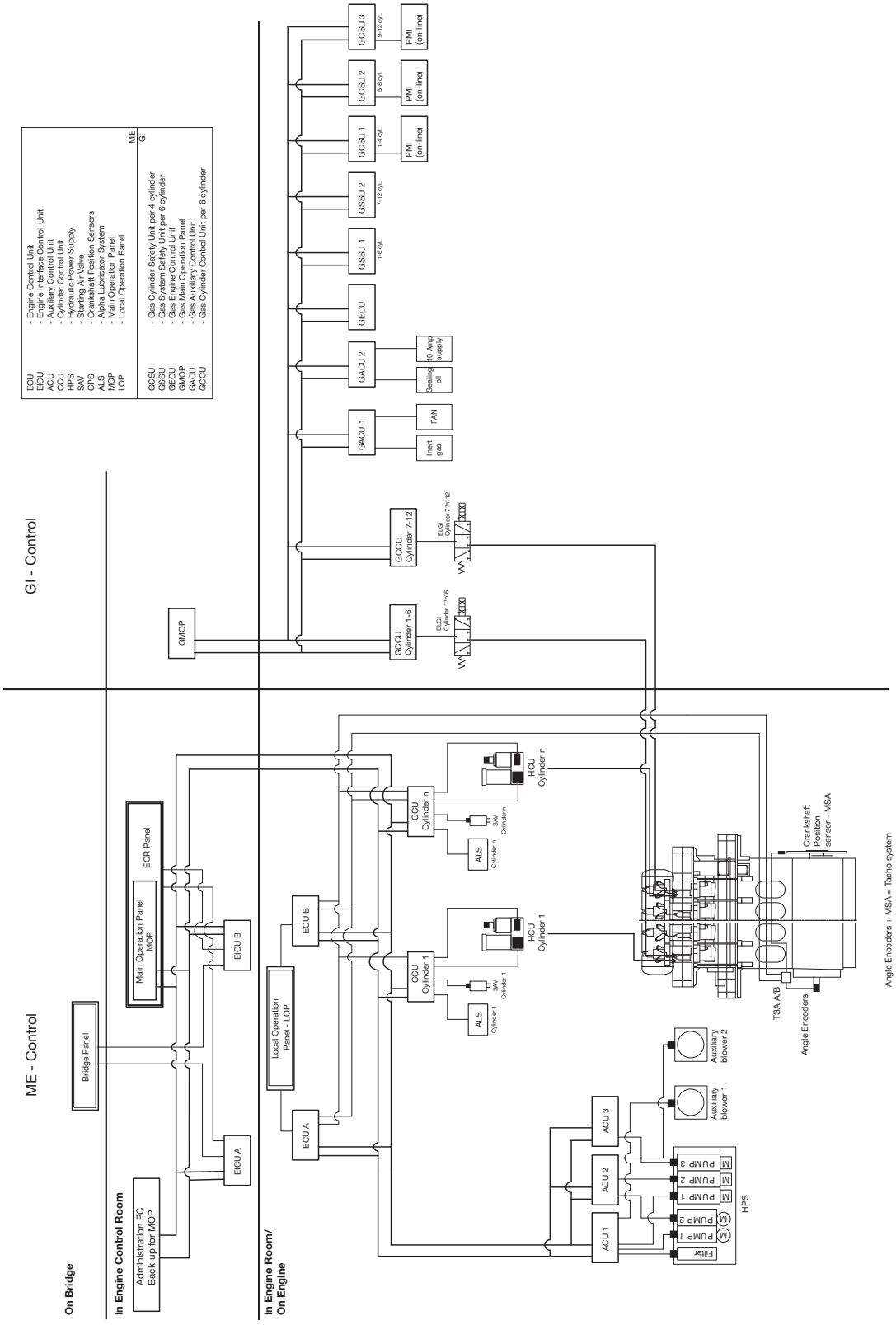

Fig. 16.02.01: ME-GI/ME-C-GI Control System

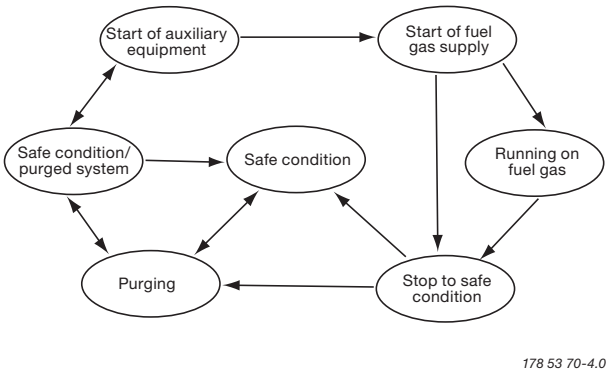

Fig. 16.02.02: Fuel gas operation state model

If the failure relates to the purging system it may be necessary to carry out purging manually before an engine repair is carried out. (This will be explained later).

The Dual Fuel Control system is a single system without manual back-up control.

However, the following equipment is made redundant to secure that a single fault will not cause fuel gas stop:

- The communication network is doubled in order to minimize the risk of interrupting the communication between the control units.

- Vital sensors are doubled and one set of these sensors is connected to the Plant Control and the other to the Safety System. Consequently a sensor failure which is not detectable is of no consequence for safe fuel gas operation.

Control Unit Hardware

For the Dual Fuel Control System two different types of hardware are used: the Multi Purpose Controller Units and the GCSU, both developed by MAN Diesel A/S.

The Multi Purpose Controller Units are used for the following units: GECU, GACU, GCCU, and the GSSU. In the following a functionality description for each units is given, see also Fig. 16.02.01.

Gas Main Operating Panel (GMOP)

For the GI control system an extra panel called GMOP is introduced. From here all manually operations can be initiated. For example the change between the different running modes can be done and the operator has the possibility to manually initiate the purging of the gas pipes system with inert gas.

Additionally it contains the facilities to manually start up or to stop on fuel gas.

GECU, Plants control

The GECU handles the Plant Control and in combination with GCCU it also handles Fuel Control. Example: When ‘dual fuel’ Start is initiated manually by the operator, the Plant Control will start the automatic start sequence which will initiate start-up of the sealing oil pump. When the engine condition for Dual Fuel running, which is monitored by the GECU, is confirmed to meet the prescribed demands, the Plant Control releases a ‘Start Dual Fuel Operation’ signal for the GCCU (Fuel Control).

In combination with the GCCU, the GECU will effect the fuel gas injection if all conditions for Dual Fuel running are fulfilled.

The Plant Control monitors the condition of the following:

- HC ‘Sensors’
- Gas Supply System
- Sealing Oil System
- Pipe Ventilation
- Inert Gas System
- Network connection to other units of the Dual Fuel System

and, if a failure occur, the Plant Control will automatically interrupt fuel gas start operation and return the plant to Gas Safe Condition.

The GECU also contains the Fuel Control which includes all facilities required for calculating the fuel gas index and the Pilot Oil index based on the command from the conventional governor and the actual active mode.

Based on these data and including information about the fuel gas pressure, the Fuel Control calculates the start and duration time of the injection, then sends the signal to GCCU which effectuates the injection by controlling the ELGI valve.

GACU, Auxiliary Control

The GACU contains facilities necessary to control the following auxiliary systems: The fan for ventilating of the double wall pipes, the sealing oil pump, the purging with inert gas and the gas supply system.

The GACU controls:

- Start/stop of pumps, fans, and of the gas supply system.
- The sealing oil pressure set points
- The pressure set points for the gas supply system.

GCCU, ELGI control

The GCCU controls the ELGI valve on the basics of data calculated by the GECU.

In due time before each injection the GCU receives information from the GECU of start timing for fuel gas injection, and the time for the injection valve to stay open. If the GCCU receive a signal ready from the safety system and GCCU observes no abnormalities then the injection of fuel gas will starts at the relevant crankshaft position.

The GSSU, Fuel Gas System Monitoring and Control

The GSSU performs safety monitoring of the fuel gas System and controls the fuel gas Shut Down.

It monitors the following:

- Status of exhaust gas temperature
- Pipe ventilation of the double wall piping
- Sealing Oil pressure
- Fuel gas Pressure
- GCSU ready signal

If one of the above parameters, referring to the relevant fuel gas state differs from normal service value, the GSSU overrules any other signals and fuel gas shut down will be released.

After the cause of the shut down has been corrected the fuel gas operation can be manually restarted.

GCSU, PMI on-line

The purpose of the GCSUs is to monitor the cylinders by the PMI on-line system for being in condition for injection of fuel gas. The following events are monitored:

- Fuel gas accumulator pressure drop during injection
- Pilot oil injection pressure
- Cylinder pressure:
  - Low compression pressure
  - Knocking
  - Low Expansion pressure
- Scavenge air pressure

If one of the events is abnormal the ELGI valve is closed and a shut down of fuel gas is activated by the GSSU.

Safety remarks

The primary design target of the dual fuel concept is to ensure a Dual Fuel Control System which will provide the highest possible degree of safety to personnel. Consequently, a failure in the gas system will, in general, cause shut down of fuel gas running and subsequent purging of pipes and accumulators

Fuel gas operation is monitored by the safety system, which will shut down fuel gas operation in case of failure. Additionally, fuel gas operation is monitored by the Plant Control and the Fuel Control, and fuel gas operation is stopped if one of the systems detects a failure. As parameters vital for fuel gas operation are monitored, both by the Plant Control / Fuel Control and the Safety Control System, these systems will provide mutual back-up.

Vibration Aspects

17

Vibration Aspects

The vibration characteristics of the two-stroke low speed diesel engines can for practical purposes be split up into four categories, and if the adequate countermeasures are considered from the early project stage, the influence of the excitation sources can be minimised or fully compensated.

In general, the marine diesel engine may influence the hull with the following:

- External unbalanced moments
  These can be classified as unbalanced 1st and 2nd order external moments, which need to be considered only for certain cylinder numbers
- Guide force moments
- Axial vibrations in the shaft system
- Torsional vibrations in the shaft system.

The external unbalanced moments and guide force moments are illustrated in Fig. 17.01.01.

In the following, a brief description is given of their origin and of the proper countermeasures needed to render them harmless.

External unbalanced moments

The inertia forces originating from the unbalanced rotating and reciprocating masses of the engine create unbalanced external moments although the external forces are zero.

Of these moments, the 1st order (one cycle per revolution) and the 2nd order (two cycles per revolution) need to be considered for engines with a low number of cylinders. On 7-cylinder engines, also the 4th order external moment may have to be examined. The inertia forces on engines with more than 6 cylinders tend, more or less, to neutralise themselves.

Countermeasures have to be taken if hull resonance occurs in the operating speed range, and if the vibration level leads to higher accelerations and/or velocities than the guidance values given by international standards or recommendations (for instance related to special agreement between shipowner and shipyard). The natural frequency of the hull depends on the hull's rigidity and distribution of masses, whereas the vibration level at resonance depends mainly on the magnitude of the external moment and the engine's position in relation to the vibration nodes of the ship.

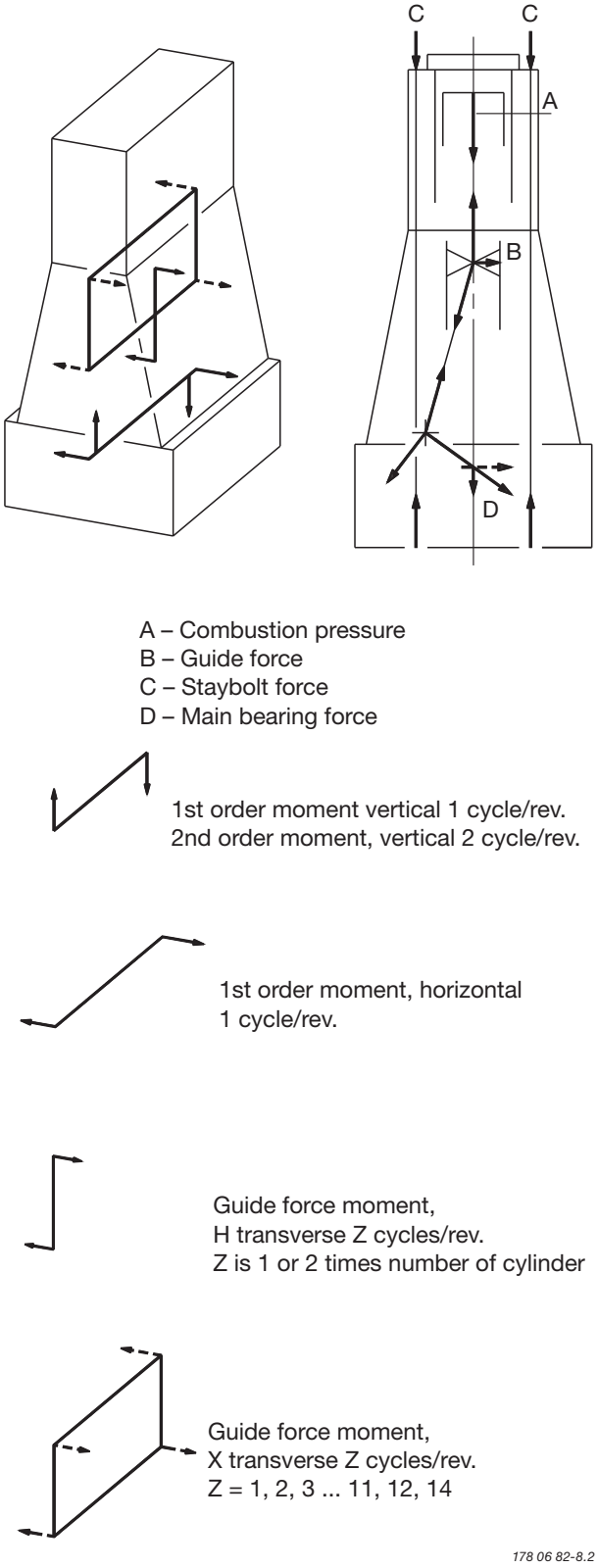

Fig. 17.01.01: External unbalanced moments and guide force moments

2nd Order Moments on 4, 5 and 6-cylinder Engines

The 2nd order moment acts only in the vertical direction. Precautions need only to be considered for 4, 5 and 6-cylinder engines in general.

Resonance with the 2nd order moment may occur in the event of hull vibrations with more than 3 nodes. Contrary to the calculation of natural frequency with 2 and 3 nodes, the calculation of the 4 and 5-node natural frequencies for the hull is a rather comprehensive procedure and often not very accurate, despite advanced calculation methods.

A 2nd order moment compensator comprises two counter-rotating masses running at twice the engine speed.

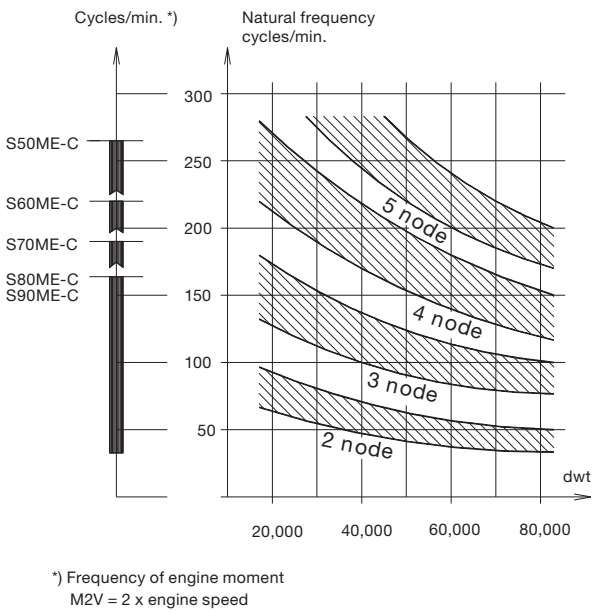

Fig. 17.02.01: Statistics of vertical hull vibrations in tankers and bulk carriers, example from S90-50ME-C

Compensator solutions

Several solutions are available to cope with the 2nd order moment, as shown in Fig. 17.03.02, out of which the most cost efficient one can be chosen in the individual case.

The information about compensator solutions is to be found in the Project Guide for the relevant engine type.

Determine the need

A decision regarding the vibrational aspects and the possible use of compensators must be taken at the contract stage. If no experience is available from sister ships, which would be the best basis for deciding whether compensators are necessary or not, it is advisable to make calculations to determine which of the solutions should be applied.

If the compensator is initially omitted, measurements taken during the sea trial, or later in service and with fully loaded ship, will be able to show if a compensator has to be fitted at all.

Preparation for compensators

If no calculations are available at the contract stage, we advise to make preparations for the fitting of an electrically driven moment compensator in the steering compartment, see Section 17.03.

The information about preparation for compensators is to be found in the Project Guide for the relevant engine type.

Basic design regarding compensators

The information is to be found in the Project Guide for the relevant engine type.

The available options for 5 and 6-cylinder engines are listed in the Extent of Delivery. For 4-cylinder engines, the information is available on request.

1st Order Moments on 4-cylinder Engines

This section is only applicable for engines type 70 and smaller.

1st order moments act in both vertical and horizontal direction. For our two-stroke engines with standard balancing these are of the same magnitudes.

For engines with five cylinders or more, the 1st order moment is rarely of any significance to the ship. It can, however, be of a disturbing magnitude in four-cylinder engines.

Resonance with a 1st order moment may occur for hull vibrations with 2 and/or 3 nodes. This resonance can be calculated with reasonable accuracy, and the calculation will show whether a compensator is necessary or not on four-cylinder engines.

A resonance with the vertical moment for the 2 node hull vibration can often be critical, whereas the resonance with the horizontal moment occurs at a higher speed than the nominal because of the higher natural frequency of horizontal hull vibrations.

Balancing 1st order moments

As standard, four-cylinder engines are fitted with 1st order moment balancers in shape of adjustable counterweights, as illustrated in Fig. 17.02.02. These can reduce the vertical moment to an insignificant value (although, increasing correspondingly the horizontal moment), so this resonance is easily dealt with. A solution with zero horizontal moment is also available.

1st order moment compensators

In rare cases, where the 1st order moment will cause resonance with both the vertical and the horizontal hull vibration mode in the normal speed range of the engine, a 1st order compensator can be introduced as an option, reducing the 1st order moment to a harmless value.

Since resonance with both the vertical and the horizontal hull vibration mode is rare, the standard engine is not prepared for the fitting of 1st order moment compensators.

Data on 1st order moment compensators and preparation as well as options in the Extent of Delivery are available on request.

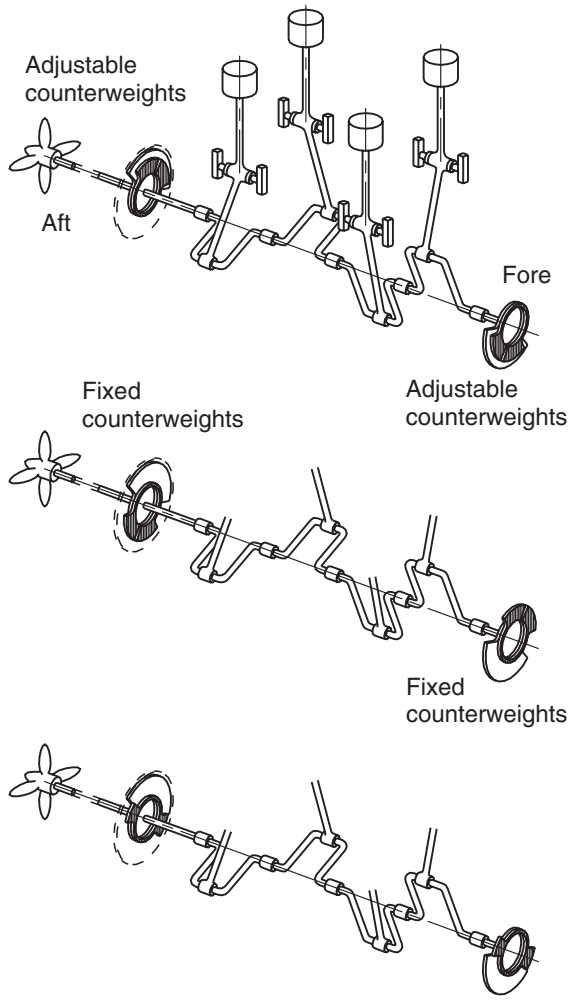

178 16 78-7.0

Fig. 17.02.02: Examples of counterweights

Electrically Driven Moment Compensator

If it is decided not to use chain driven moment compensators and, furthermore, not to prepare the main engine for compensators to be fitted later, another solution can be used, if annoying 2nd order vibrations should occur: An electrically driven moment compensator synchronised to the correct phase relative to the external force or moment can neutralise the excitation.

This type of compensator needs an extra seating fitted, preferably, in the steering gear room where vibratory deflections are largest and the effect of the compensator will therefore be greatest.

The electrically driven compensator will not give rise to distorting stresses in the hull, but it is more expensive than the engine-mounted compensators. It does, however, offer several advantages over the engine mounted solutions:

- When placed in the steering gear room, the compensator is not as sensitive to the positioning of the node as the compensators 2) and 3) mentioned in Section 17.02.

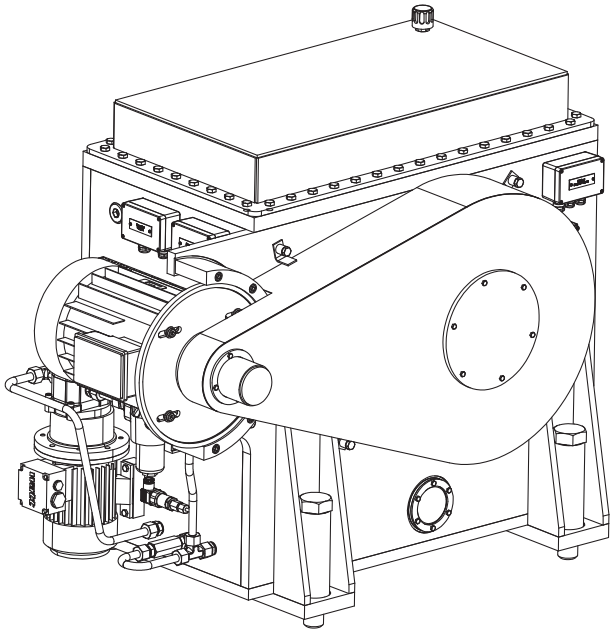

178 57 45-6.0

- The decision whether or not to install compensators can be taken at a much later stage of a project, since no special version of the engine structure has to be ordered for the installation.

- No preparation for a later installation nor an extra chain drive for the compensator on the fore end of the engine is required. This saves the cost of such preparation, often left unused.

- Compensators could be retrofit, even on ships in service, and also be applied to engines with a higher number of cylinders than is normally considered relevant, if found necessary.

- The compensator only needs to be active at speeds critical for the hull girder vibration. Thus, it may be activated or deactivated at specified speeds automatically or manually.

- Combinations with and without moment compensators are not required in torsional and axial vibration calculations, since the electrically driven moment compensator is not part of the mass-elastic system of the crankshaft.

Furthermore, by using the compensator as a vibration exciter a ship's vibration pattern can easily be identified without having the engine running, e.g. on newbuildings at an advanced stage of construction. If it is verified that a ship does not need the compensator, it can be removed and reused on another ship.

It is a condition for the application of the rotating force moment compensator that no annoying longitudinal hull girder vibration modes are excited. Based on our present knowledge, and confirmed by actual vibration measurements onboard a ship, we do not expect such problems.

Further to compensating 2nd order moments, electrically driven moment compensators are also available for balancing other forces and moments. The available options are listed in the Extent of Delivery.

Fig. 17.03.01: MAN Diesel 2nd order electrically driven moment compensator, separately mounted, option: 4 31 255

Moment compensator
Aft end, option: 4 31 203

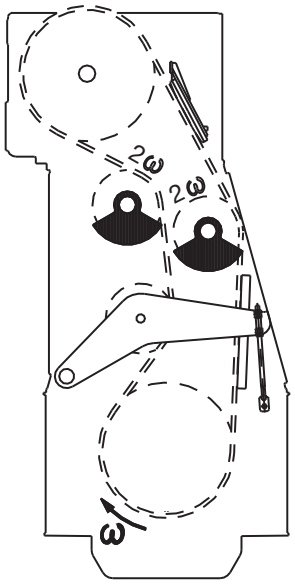

Compensating moment
F2C x Lnode
outbalances M2V

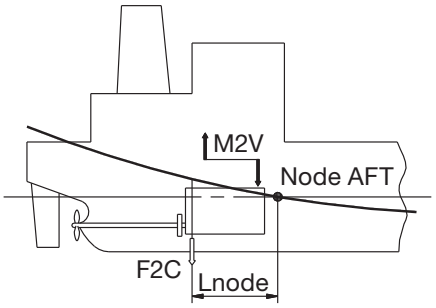

Moment from compensator
M2C reduces M2V

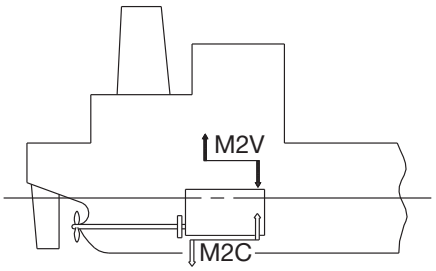

Moment compensator
Fore end, option: 4 31 213

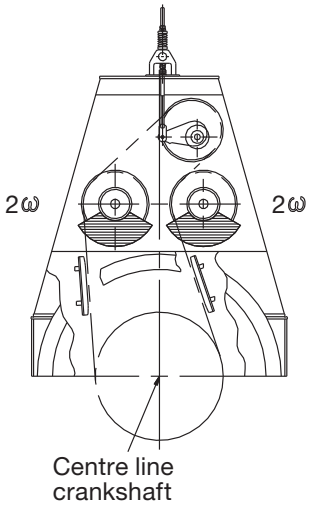

Electrically driven moment compensator

Compensating moment
F_D x Lnode
outbalances M2V

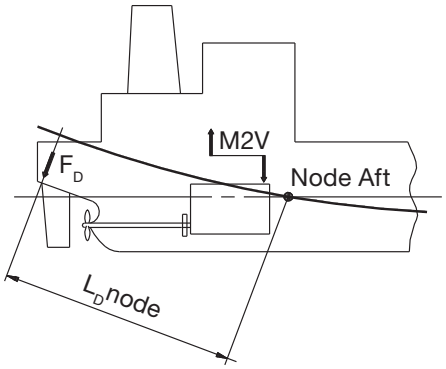

3 and 4-node vertical hull girder mode

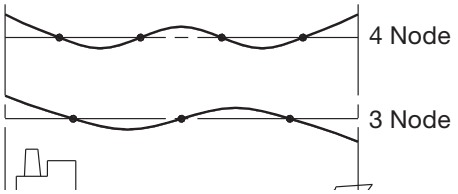

178 27 10-4.1

Fig. 17.03.02: Compensation of 2nd order vertical external moments

Power Related Unbalance

To evaluate if there is a risk that 1st and 2nd order external moments will excite disturbing hull vibrations, the concept Power Related Unbalance (PRU) can be used as a **guidance**, see Table 17.04.01 below.

$$PRU = \frac{\text{External moment}}{\text{Engine power}} \text{ Nm/kW}$$

With the PRU-value, stating the external moment relative to the engine power, it is possible to give an estimate of the risk of hull vibrations for a specific engine.

Based on service experience from a great number of large ships with engines of different types and cylinder numbers, the PRU-values have been classified in four groups as follows:

PRU Nm/kW	Need for compensator
0 - 60	Not relevant
60 - 120	Unlikely
120 - 220	Likely
220 -	Most likely

	5 cyl.	6 cyl.	7 cyl.	8 cyl.	9 cyl.	10 cyl.	11 cyl.	12 cyl.	14 cyl.
S70ME-C8-GI – 3,270 kW/cyl at 91 r/min									
PRU acc. to 1st order, Nm/kW	16.0	0.0	6.8	20.0	N.a.	N.a.	N.a.	N.a.	N.a.
PRU acc. to 2nd order, Nm/kW	184.5	107.0	26.6	0.0	N.a.	N.a.	N.a.	N.a.	N.a.
S65ME-C8-GI – 2,870 kW/cyl at 95 r/min									
PRU acc. to 1st order, Nm/kW	15.8	0.0	6.7	19.8	N.a.	N.a.	N.a.	N.a.	N.a.
PRU acc. to 2nd order, Nm/kW	188.2	109.1	27.1	0.0	N.a.	N.a.	N.a.	N.a.	N.a.
S60ME-C8-GI – 2,380 kW/cyl at 105 r/min									
PRU acc. to 1st order, Nm/kW	13.7	0.0	5.8	17.2	N.a.	N.a.	N.a.	N.a.	N.a.
PRU acc. to 2nd order, Nm/kW	158.7	92.0	22.9	0.0	N.a.	N.a.	N.a.	N.a.	N.a.

Based on external moments in layout point L_1
N.a. Not applicable
*) Available on request
Data for 4-cylinder engines is available on request

Table 17.04.01: Power Related Unbalance (PRU) values in Nm/kW for S-ME-C-GI engines

Calculation of External Moments

In the table at the end of this chapter, the external moments (M_1) are stated at the speed (n_1) and MCR rating in point L_1 of the layout diagram.

For other speeds (n_A), the corresponding external moments (M_A) are calculated by means of the formula:

$$M_A = M_1 \times \left\{\frac{n_A}{n_1}\right\}^2 \text{ kNm}$$

(The tolerance on the calculated values is 2.5%).

Guide Force Moments

The so-called guide force moments are caused by the transverse reaction forces acting on the crossheads due to the connecting rod/crankshaft mechanism. These moments may excite engine vibrations, moving the engine top athwartships and causing a rocking (excited by H-moment) or twisting (excited by X-moment) movement of the engine as illustrated in Fig. 17.05.01.

The guide force moments corresponding to the MCR rating (L_1) are stated in Table 17.07.01.

Top bracing

The guide force moments are harmless except when resonance vibrations occur in the engine/double bottom system.

As this system is very difficult to calculate with the necessary accuracy, MAN Diesel strongly recommend, as standard, that top bracing is installed between the engine's upper platform brackets and the casing side.

The vibration level on the engine when installed in the vessel must comply with MAN Diesel vibration limits as stated in Fig. 17.05.02.

We recommend using the hydraulic top bracing which allow adjustment to the loading conditions of the ship. Mechanical top bracings with stiff connections are available on request.

With both types of top bracing, the above-mentioned natural frequency will increase to a level where resonance will occur above the normal engine speed. Details of the top bracings are shown in Chapter 05.

Definition of Guide Force Moments

Over the years it has been discussed how to define the guide force moments. Especially now that complete FEM-models are made to predict hull/engine interaction, the propeller definition of these moments has become increasingly important.

H-type Guide Force Moment (M_H)

Each cylinder unit produces a force couple consisting of:
1. A force at crankshaft level
2. Another force at crosshead guide level. The position of the force changes over one revolution as the guide shoe reciprocates on the guide.

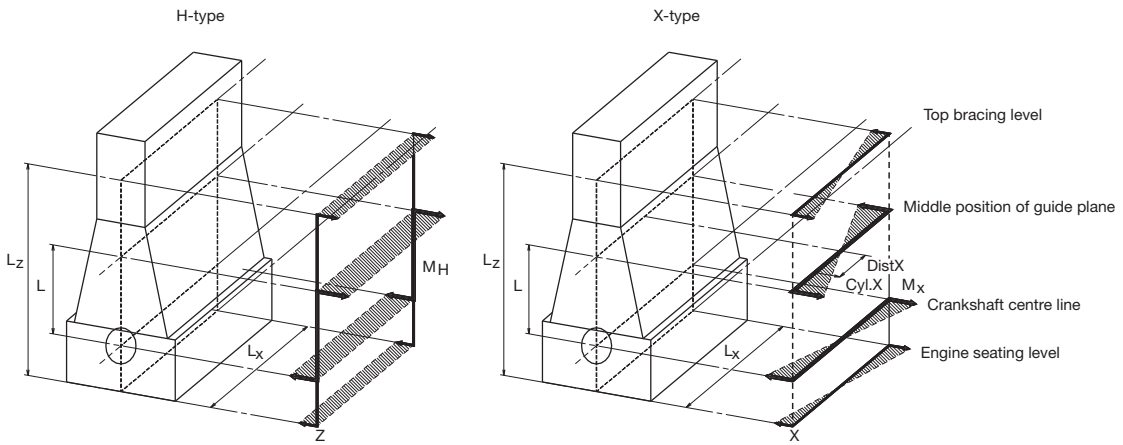

178 06 81-6.4

Fig. 17.05.01: H-type and X-type guide force moments

Vibration Limits Valid for Single Order Harmonics

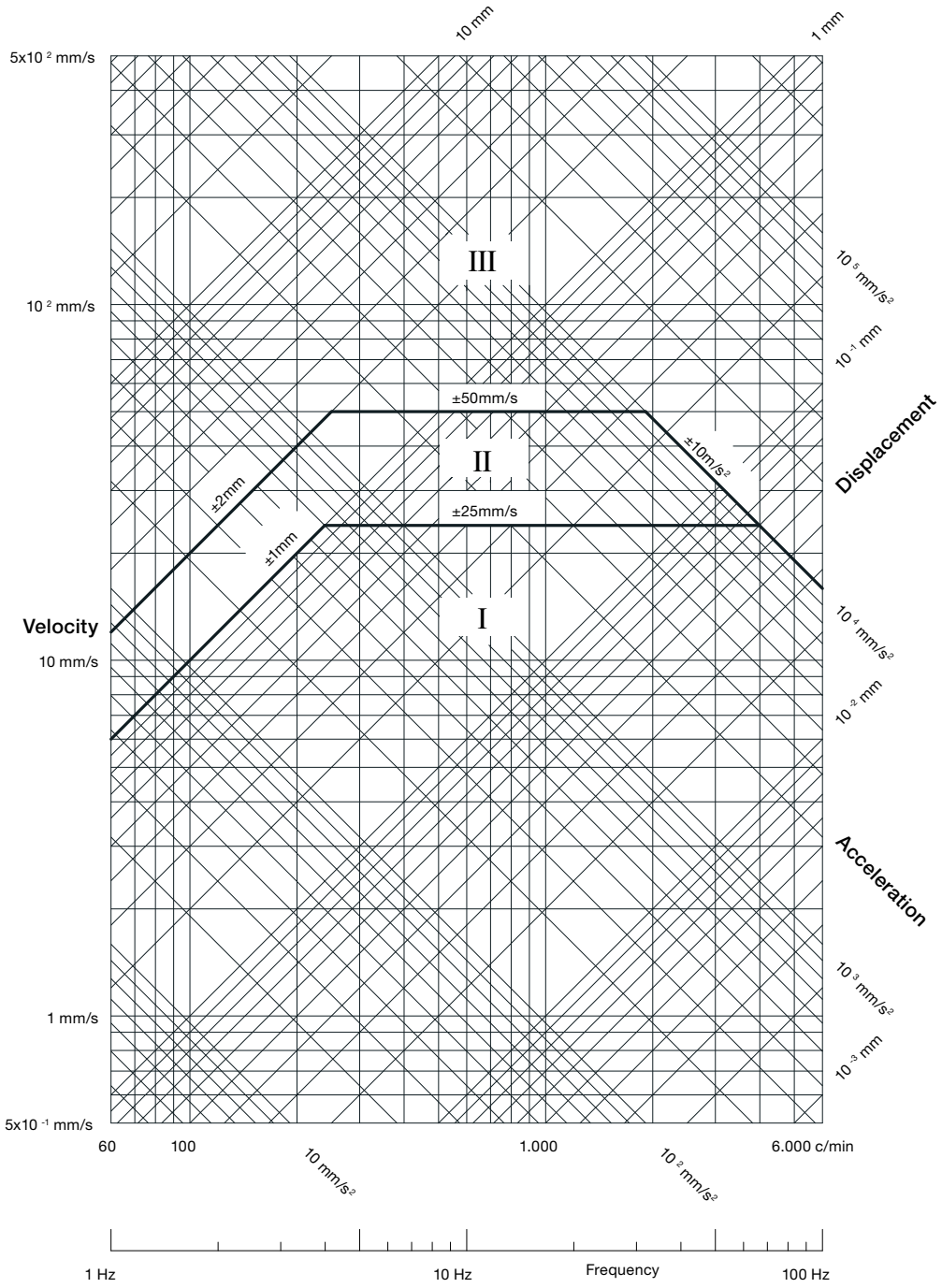

Zone I: Acceptable
Zone II: Vibration will not damage the main engine, however, under adverse conditions, annoying/harmful vibration responses may appear in the connected structures
Zone III: Not acceptable

078 81 27-6.1

Fig.17.05.02: Vibration limits

As the deflection shape for the H-type is equal for each cylinder, the Nth order H-type guide force moment for an N-cylinder engine with regular firing order is:

$N \times M_{H(one\ cylinder)}$

For modelling purposes, the size of the forces in the force couple is:

Force = M_H/L [kN]

where L is the distance between crankshaft level and the middle position of the crosshead guide (i.e. the length of the connecting rod).

As the interaction between engine and hull is at the engine seating and the top bracing positions, this force couple may alternatively be applied in those positions with a vertical distance of (L_Z). Then the force can be calculated as:

$Force_Z = M_H/L_Z$ [kN]

Any other vertical distance may be applied so as to accomodate the actual hull (FEM) model.

The force couple may be distributed at any number of points in the longitudinal direction. A reasonable way of dividing the couple is by the number of top bracing and then applying the forces at those points.

$Force_{Z,\ one\ point} = Force_{Z,\ total}/N_{top\ bracing,\ total}$ [kN]

X-type Guide Force Moment (M_x)

The X-type guide force moment is calculated based on the same force couple as described above. However, as the deflection shape is twisting the engine, each cylinder unit does not contribute with an equal amount. The centre units do not contribute very much whereas the units at each end contributes much.

A so-called 'Bi-moment' can be calculated (Fig. 17.05.01):

'Bi-moment' = $\sum$ [force-couple(cyl.X) x distX] in kNm^2

The X-type guide force moment is then defined as:

M_x = 'Bi-Moment'/L kNm

For modelling purpose, the size of the four (4) forces can be calculated:

Force = M_x/L_x [kN]

where:

L_x is the horizontal length between 'force points'.

Similar to the situation for the H-type guide force moment, the forces may be applied in positions suitable for the FEM model of the hull. Thus the forces may be referred to another vertical level L_Z above the crankshaft centre line. These forces can be calculated as follows:

$$Force_{Z,\ one\ point} = \frac{M_x \times L}{L \times L} \text{ [kN]}$$

In order to calculate the forces, it is necessary to know the lengths of the connecting rods = L, which are:

Engine Type	L in mm
S70ME-C8-GI	2,870
S65ME-C8-GI	2,730
S60ME-C8-GI	2,460

Axial Vibrations

When the crank throw is loaded by the gas pressure through the connecting rod mechanism, the arms of the crank throw deflect in the axial direction of the crankshaft, exciting axial vibrations. Through the thrust bearing, the system is connected to the ship's hull.

Generally, only zero-node axial vibrations are of interest. Thus the effect of the additional bending stresses in the crankshaft and possible vibrations of the ship`s structure due to the reaction force in the thrust bearing are to be consideraed.

An axial damper is fitted as standard on all engines, minimising the effects of the axial vibrations, EoD: 4 31 111.

Torsional Vibrations

The reciprocating and rotating masses of the engine including the crankshaft, the thrust shaft, the intermediate shaft(s), the propeller shaft and the propeller are for calculation purposes considered a system of rotating masses (inertias) interconnected by torsional springs. The gas pressure of the engine acts through the connecting rod mechanism with a varying torque on each crank throw, exciting torsional vibration in the system with different frequencies.

In general, only torsional vibrations with one and two nodes need to be considered. The main critical order, causing the largest extra stresses in the shaft line, is normally the vibration with order equal to the number of cylinders, i.e., six cycles per revolution on a six cylinder engine. This resonance is positioned at the engine speed corresponding to the natural torsional frequency divided by the number of cylinders.

The torsional vibration conditions may, for certain installations require a torsional vibration damper, option: 4 31 105.

Plants with 11 or 12-cylinder engines type 98-80 require a torsional vibration damper.

Based on our statistics, this need **may arise** for the following types of installation:
- Plants with controllable pitch propeller
- Plants with unusual shafting layout and for special owner/yard requirements
- Plants with 8-cylinder engines.

The so-called QPT (Quick Passage of a barred speed range Technique), is an alternative to a torsional vibration damper, on a plant equipped with a controllable pitch propeller. The QPT could be implemented in the governor in order to limit the vibratory stresses during the passage of the barred speed range.

The application of the QPT, option: 4 31 108, has to be decided by the engine maker and MAN Diesel based on final torsional vibration calculations.

Six-cylinder engines, require special attention. On account of the heavy excitation, the natural frequency of the system with one-node vibration should be situated away from the normal operating speed range, to avoid its effect. This can be achieved by changing the masses and/or the stiffness of the system so as to give a much higher, or much lower, natural frequency, called undercritical or overcritical running, respectively.

Owing to the very large variety of possible shafting arrangements that may be used in combination with a specific engine, only detailed torsional vibration calculations of the specific plant can determine whether or not a torsional vibration damper is necessary.

Undercritical running

The natural frequency of the one-node vibration is so adjusted that resonance with the main critical order occurs about 35-45% above the engine speed at specified MCR.

Such undercritical conditions can be realised by choosing a rigid shaft system, leading to a relatively high natural frequency.

The characteristics of an undercritical system are normally:
- Relatively short shafting system
- Probably no tuning wheel
- Turning wheel with relatively low inertia
- Large diameters of shafting, enabling the use of shafting material with a moderate ultimate tensile strength, but requiring careful shaft alignment, (due to relatively high bending stiffness)
- Without barred speed range.

Critical Running

When running undercritical, significant varying torque at MCR conditions of about 100-150% of the mean torque is to be expected.

This torque (propeller torsional amplitude) induces a significant varying propeller thrust which, under adverse conditions, might excite annoying longitudinal vibrations on engine/double bottom and/or deck house.

The yard should be aware of this and ensure that the complete aft body structure of the ship, including the double bottom in the engine room, is designed to be able to cope with the described phenomena.

Overcritical running

The natural frequency of the one-node vibration is so adjusted that resonance with the main critical order occurs about 30-70% below the engine speed at specified MCR. Such overcritical conditions can be realised by choosing an elastic shaft system, leading to a relatively low natural frequency.

The characteristics of overcritical conditions are:

- Tuning wheel may be necessary on crankshaft fore end
- Turning wheel with relatively high inertia
- Shafts with relatively small diameters, requiring shafting material with a relatively high ultimate tensile strength
- With barred speed range, EoD: 4 07 015, of about ±10% with respect to the critical engine speed.

Torsional vibrations in overcritical conditions may, in special cases, have to be eliminated by the use of a torsional vibration damper.

Overcritical layout is normally applied for engines with more than four cylinders.

Please note:
We do not include any tuning wheel or torsional vibration damper in the standard scope of supply, as the proper countermeasure has to be found after torsional vibration calculations for the specific plant, and after the decision has been taken if and where a barred speed range might be acceptable.

For further information about vibration aspects, please refer to our publications:

An Introduction to Vibration Aspects

Vibration Characteristics of Two-stroke Engines

The publications are available at www.mandieselturbo.com under ‘Products’ → ‘Marine Engines & Systems’ → ‘Low Speed’ → ‘Technical Papers’.

External Forces and Moments, S70ME-C8/-GI Layout point L_1 - SFOC

No of cylinder :	5	6	7	8
Firing type :	1-4-3-2-5	1-5-3-4-2-6	1-7-2-5-4-3-6	1-8-3-4-7-2-5-6
External forces [kN] :				
1. Order : Horizontal	0	0	0	0
1. Order : Vertical	0	0	0	0
2. Order : Vertical	0	0	0	0
4. Order : Vertical	0	0	0	0
6. Order : Vertical	0	15	0	0
External moments [kNm] :				
1. Order : Horizontal a)	261	0	156	522
1. Order : Vertical a)	261	0	156	522
2. Order : Vertical	3,016 c)	2,098 c)	609	0
4. Order : Vertical	18	141	402	163
6. Order : Vertical	1	0	1	0
Guide force H-moments in [kNm] :				
1 x No. of cyl.	2,077	1,536	1,144	822
2 x No. of cyl.	172	70	80	82
3 x No. of cyl.	55	-	-	-
Guide force X-moments in [kNm] :				
1. Order :	226	0	134	451
2. Order :	678	472	137	0
3. Order :	485	876	958	1,228
4. Order :	87	670	1,905	774
5. Order :	0	0	173	2,173
6. Order :	48	0	28	0
7. Order :	337	0	0	61
8. Order :	212	148	11	0
9. Order :	11	214	24	21
10. Order :	0	49	140	0
11. Order :	4	0	81	104
12. Order :	24	0	5	19
13. Order :	22	0	1	55
14. Order :	2	16	0	0
15. Order :	0	41	1	4
16. Order :	2	15	4	0

a) 1st order moments are, as standard, balanced so as to obtain equal values for horizontal and vertical moments for all cylinder numbers.

c) 5 and 6-cylinder engines can be fitted with 2nd order moment compensators on the aft and fore end, reducing the 2nd order external moment.

Table 17.07.01

External Forces and Moments, S65ME-C8/-GI Layout point L_1 - SFOC

No of cylinder :	5	6	7	8
Firing type :	1-4-3-2-5	1-5-3-4-2-6	1-7-2-5-4-3-6	1-8-3-4-7-2-5-6
External forces [kN] :				
1. Order : Horizontal	0	0	0	0
1. Order : Vertical	0	0	0	0
2. Order : Vertical	0	0	0	0
4. Order : Vertical	0	0	0	0
6. Order : Vertical	0	16	0	0
External moments [kNm] :				
1. Order : Horizontal a)	227	0	135	454
1. Order : Vertical a)	227	0	135	454
2. Order : Vertical	2,699 c)	1,877 c)	545	0
4. Order : Vertical	18	134	380	155
6. Order : Vertical	1	0	1	0
Guide force H-moments in [kNm] :				
1 x No. of cyl.	1,799	1,322	971	699
2 x No. of cyl.	143	70	80	82
3 x No. of cyl.	55	-	-	-
Guide force X-moments in [kNm] :				
1. Order :	187	0	111	374
2. Order :	448	311	90	0
3. Order :	302	547	598	766
4. Order :	69	532	1,511	614
5. Order :	0	0	144	1,803
6. Order :	39	0	23	0
7. Order :	274	0	0	49
8. Order :	173	120	9	0
9. Order :	9	173	19	17
10. Order :	0	39	112	0
11. Order :	3	0	68	87
12. Order :	23	0	5	18
13. Order :	21	0	1	53
14. Order :	2	16	0	0
15. Order :	0	40	1	4
16. Order :	2	14	4	0

a) 1st order moments are, as standard, balanced so as to obtain equal values for horizontal and vertical moments for all cylinder numbers.

c) 5 and 6-cylinder engines can be fitted with 2nd order moment compensators on the aft and fore end, reducing the 2nd order external moment.

Table 17.07.01

External Forces and Moments, S60ME-C8/-GI Layout point L_1 - SFOC

No of cylinder :	5	6	7	8
Firing type :	1-4-3-2-5	1-5-3-4-2-6	1-7-2-5-4-3-6	1-8-3-4-7-2-5-6
External forces [kN] :				
1. Order : Horizontal	0	0	0	0
1. Order : Vertical	0	0	0	0
2. Order : Vertical	0	0	0	0
4. Order : Vertical	0	0	0	0
6. Order : Vertical	0	11	0	0
External moments [kNm] :				
1. Order : Horizontal a)	163	0	97	326
1. Order : Vertical a)	163	0	97	326
2. Order : Vertical	1,884 c)	1,311 c)	380	0
4. Order : Vertical	11	88	251	102
6. Order : Vertical	1	0	0	0
Guide force H-moments in [kNm] :				
1 x No. of cyl.	1,296	962	721	519
2 x No. of cyl.	112	44	49	51
3 x No. of cyl.	34	-	-	-
Guide force X-moments in [kNm] :				
1. Order :	139	0	83	279
2. Order :	414	288	84	0
3. Order :	302	547	598	766
4. Order :	54	419	1,190	483
5. Order :	0	0	108	1,356
6. Order :	30	0	18	0
7. Order :	213	0	0	38
8. Order :	134	93	7	0
9. Order :	7	137	15	14
10. Order :	0	32	92	0
11. Order :	2	0	52	67
12. Order :	15	0	3	12
13. Order :	13	0	1	34
14. Order :	1	10	0	0
15. Order :	0	25	1	2
16. Order :	1	9	3	0

a) 1st order moments are, as standard, balanced so as to obtain equal values for horizontal and vertical moments for all cylinder numbers.

c) 5 and 6-cylinder engines can be fitted with 2nd order moment compensators on the aft and fore end, reducing the 2nd order external moment.

Table 17.07.01

Appendix

A

Symbols for Piping

No.	Symbol	Symbol designation	No.	Symbol	Symbol designation
1	**General conventional symbols**		2.14		Spectacle flange
1.1		Pipe	2.15		Bulkhead fitting water tight, flange
1.2		Pipe with indication of direction of flow	2.16		Bulkhead crossing, non-watertight
1.3		Valves, gate valves, cocks and flaps	2.17		Pipe going upwards
1.4		Appliances	2.18		Pipe going downwards
1.5		Indicating and measuring instruments	2.19		Orifice
2	**Pipes and pipe joints**		**3**	**Valves, gate valves, cocks and flaps**	
2.1		Crossing pipes, not connected	3.1		Valve, straight through
2.2		Crossing pipes, connected	3.2		Valves, angle
2.3		Tee pipe	3.3		Valves, three way
2.4		Flexible pipe	3.4		Non-return valve (flap), straight
2.5		Expansion pipe (corrugated) general	3.5		Non-return valve (flap), angle
2.6		Joint, screwed	3.6		Non-return valve (flap), straight, screw down
2.7		Joint, flanged	3.7		Non-return valve (flap), angle, screw down
2.8		Joint, sleeve	3.8		Flap, straight through
2.9		Joint, quick-releasing	3.9		Flap, angle
2.10		Expansion joint with gland	3.10		Reduction valve
2.11		Expansion pipe	3.11		Safety valve
2.12		Cap nut	3.12		Angle safety valve
2.13		Blank flange	3.13		Self-closing valve

No.	Symbol	Symbol designation	No.	Symbol	Symbol designation
3.14		Quick-opening valve	**4**	**Control and regulation parts**	
3.15		Quick-closing valve	4.1		Hand-operated
3.16		Regulating valve	4.2		Remote control
3.17		Kingston valve	4.3		Spring
3.18		Ballvalve (cock)	4.4		Mass
3.19		Butterfly valve	4.5		Float
3.20		Gate valve	4.6		Piston
3.21		Double-seated changeover valve	4.7		Membrane
3.22		Suction valve chest	4.8		Electric motor
3.23		Suction valve chest with non-return valves	4.9		Electro-magnetic
3.24		Double-seated changeover valve, straight	**5**	**Appliances**	
3.25		Double-seated changeover valve, angle	5.1		Mudbox
3.26		Cock, straight through	5.2		Filter or strainer
3.27		Cock, angle	5.3		Magnetic filter
3.28		Cock, three-way, L-port in plug	5.4		Separator
3.29		Cock, three-way, T-port in plug	5.5		Steam trap
3.30		Cock, four-way, straight through in plug	5.6		Centrifugal pump
3.31		Cock with bottom connection	5.7		Gear or screw pump
3.32		Cock, straight through, with bottom conn.	5.8		Hand pump (bucket)
3.33		Cock, angle, with bottom connection	5.9		Ejector
3.34		Cock, three-way, with bottom connec-tion	5.10		Various accessories (text to be added)

No.	Symbol	Symbol designation	No.	Symbol	Symbol designation
5.11		Piston pump	**7**	**Indicating instruments with ordinary symbol designations**	
6	**Fittings**		7.1		Sight flow indicator
6.1		Funnel	7.2		Observation glass
6.2		Bell-mounted pipe end	7.3		Level indicator
6.3		Air pipe	7.4		Distance level indicator
6.4		Air pipe with net	7.5		Counter (indicate function)
6.5		Air pipe with cover	7.6		Recorder
6.6		Air pipe with cover and net			
6.7		Air pipe with pressure vacuum valve			
6.8		Air pipe with pressure vacuum valve with net			
6.9		Deck fittings for sounding or filling pipe			
6.10		Short sounding pipe with selfclosing cock			
6.11		Stop for sounding rod			

The symbols used are in accordance with ISO/R 538-1967, except symbol No. 2.19

178 30 61-4.1

Fig. A.01.01: Symbols for piping