American Journal of Computing Research Repository, 2015, Vol. 3, No. 1, 1-4
Available online at http://pubs.sciepub.com/ajcrr/3/1/1

DOI:10.12691/ajcrr-3-1-1

On Re-engineering Discarded Computers, Eliminating e-wastes and Open Source Software

Francisca O. Oladipo*, Christogonus C. Madu, Christopher C. Okoro

Computer Science Department, Nnamdi Azikiwe University, Awka
*Corresponding author: of.oladipo@unizik.edu.ng

Received December 26, 2014; Revised January 01, 2015; Accepted January 04, 2015

Abstract Several discarded hardware computers littered the storage rooms and all available open spaces of the Computer Science Department Laboratory at the Nnamdi Azikiwe University Awka campus; these computers constitute electronic wastes (e-wastes) and dissipate mercury, cadmium and other chemical compounds that are injurious to human and animals. In addition to the health implications of these discarded products, substantial amount of revenue is committed to system upgrade through purchasing new hardware to replace the discarded ones as a result of the need for high performing systems. This work is focused on eliminating e-wastes in our laboratories and offices by leveraging on open source software to test for the feasibility of building high performance computers from these discarded hardware. A prototype cluster consisting of 10 discarded computers were designed to run on freely available Mandriva Enterprise Server, LINUX OS, Red Hat 9.0 as operating systems; MySql Server for the database management and tested with a simulated VOIP application. The cluster provided high performance computing power that can be used for intensive research as the processing powers of the constituent computers were combined to provide web and database servers as well as load balancers.

Keywords: *e-waste, clusters, Load Balancing, Open Source Software, clusters*

Cite This Article: Francisca O. Oladipo, Christogonus C. Madu, and Christopher C. Okoro, "On Re-engineering Discarded Computers, Eliminating e-wastes and Open Source Software." *American Journal of Computing Research Repository*, vol. 3, no. 1 (2015): 1-4. doi: 10.12691/ajcrr-3-1-1.

1. Introduction

The adoption of the concepts of open standards and improvements of clustering technology has made the technology of High Performance Computing (HPC) less stressful and easy to implement (Narayan, 2005). The scalability property of Open Source Software over proprietary ones made it possible for them to be ported on both obsolete hardware and modern one.

Open Source Software (OSS) also called Free Software (FS) is any application licensed under the GNU agreement. The software is licensed together with the source code and licensed users are given the freedom to deploy the software for any purpose, redistribute copies of the original and modified copies without having to obtain permission from previous developers. The concept of 'free' refers to freedom and not 'gratias' as is being thought in other quarters. Open source had evolved over the years as a movement and several organizations abound trying to promote the culture of openness and practices that promote the design and production of software with relaxed intellectual property restrictions for communal use on developers and users. The concerns of the promoters of 'open source software' is to leverage on the technical advantages of using such software (such as better reliability and security), while the promoters of 'free software' are more concerned with issues of freedom with respect to control (Wheeler, 2007).

Open source software had been identified by French (2004) as a tool for reducing Total Cost of Ownership (TCO) and IT capital spending especially in the educational sector. According to Narayan (2005), clustering with Linux OS is fast becoming popular in the industries and its growth coupled with the popularity of OSS, had significantly reduced the cost of building high-performance computers that are deployed for running parallel programs. Some common uses of high-performance clusters include: rendering of heavy graphics, life sciences research and oil and gas exploration.

Electronic waste or e-Waste are damaged or obsolete discarded electronic devices like computers, calculators, mobile phones, refrigerators, etc. This definition was further expanded by Wikipedia to include used electronics that are working and repairable and are candidates to be reused, salvaged, recycled or resold. This research therefore seeks to leverage on popular OSS and operating systems, eliminate e-Wastes in a university's software laboratory and gain more computing facilities by building high performance computers from them.

This paper is organized into five sections. An introduction to the general subject area and specific research was conducted in the first section, a review of related research was conducted in the second section, the materials and methods were presented in the third section while a discussion of the obtained results as well as the

recommendations were carried out in the fourth and fifth sections respectively.

2. Review of Related Literature

The paper has two aims: introducing some ways to obtain extra computing powers and eliminating e-wastes by building clusters using open source software and some discarded computer systems. This research will constitute substantial cost-saving in that the university will not have to keep on purchasing new computer systems out of desire for systems upgrade. In this section, previous approaches to building clusters and approaches to reusing or recycling discarded computers in schools will be presented.

According to Fela (2010), in addition to preventing the health hazards associated with e-wastes, a proper disposal or reuse technique also helps in job creation and reduction of greenhouse-gas emission. Other environmental and societal benefits of eliminating e-wastes through recycling include a reduced demand for new products and virgin raw materials, availability of technology to wider swaths of society due to greater affordability of products; and diminished use of landfills (Walunj, 2013). This are some of the benefit which this work seeks to provide for schools.

Arvind (2013) described e-waste as “gold unsold”. His paper detailed several research results showing projected revenues from electronic wastes and advocated for techniques to extract these resources, generate income from their re-use as well as eliminate the environmental hazards that they constitute.

The dangers with the methodology for e-waste disposal and re-use in developing countries were presented by Shinde, *et al*., (2013). The work identified and presented in graphical forms, the various hazardous environmental impacts of various disposal techniques and advocated for proper disposal and re-cycling mechanisms but did not offer any suggestions.

Camara Education® believes that computer reuse is better for the environment than recycling as it ensures that the best return is obtained from the input resources used to make the product. The organization therefore came up with a ten (10) step methodology to re-use discarded computers in schools. The process accesses the configuration of the discarded hardware to ensure that it is working (repairs non-working ones) and can provide the minimum computing requirement for working, Assess if it meets the minimum specification requirement and is working. Scalable open source operating systems and software packages are installed on them and shipped to educational hubs in developing countries specifically, East Africa, Caribbean and Ireland. At the end of their second lives, Camara Education recycles the refurbished computers at an authorized Waste Electrical and Electronic Equipment Directive (WEEE) facility.

Clarck (2010) built a cluster capable of being used for computationally intensive research (the WOPPR) from outdated commodity computers at the Worcester Polytechnic Institute. The research was born out of the need for a cluster that can simultaneously run multiple processes for gliding microtubule assay simulations by the Physics department of the institute; and the need to prolong the life cycle of the components of several PCs filling the landfill areas as the institute operates a 3-5years refresh cycle for their PC components. The feasibility of using the discarded computers were conducted using energy cost comparisons and it was discovered that the cluster from re-use will be a cheaper alternative to the refresh cycle. 10 old Dell GX620 PCs were designated as the nodes, another computer with the same configuration served as the frontend. In order to save space, an old Compaq server rack was modified to hold a rack of 10 motherboards and power source in a vertical configuration. A three-part testing which involved a real-life application showed that using recycled computers to build high performance cluster is a viable option for the older equipment depending on what type of programming needs to be run.

Flemming *et* al., (2009) explored the possibility of building Beowulf clusters with recycled computers in order to simulate the molecular dynamics of a chemical system. Eighteen 4-year old used computers discarded due to upgrade were assembled to build the cluster which was used to run a molecular modeling program NAMD. The cluster and NAMD were used to analyze an experiment to study a biologically active lipid called DOPC in the form of a monolayer constructed using Visual Molecular Dynamics (VMD). An energy minimization process was carried out before molecular dynamics could be calculated in order to render the system in its most probable physical state and testing results revealed that the constituent computers performed the numerically-intensive process of molecular modeling roughly four times faster than a current machine using synthetic benchmarks. The researchers concluded that using recycled computers to construct a Beowulf cluster was a cost effective way to increase processing power.

3. Materials and Methods

The cluster is made up of hardware and software components. In the initial design, eight IBM PCs were used, however in this re-design, nine discarded clones with the following configurations and a Toshiba Satellite notebook computer were used in building the cluster:

i. Processor: Intel Atom CPU 1.67GHz
ii. Memory: 2.00GB RAM
iii. Hard Disk Drive: 20GB
iv. Switch: 100 base-T Ethernet switch
v. Operating Systems: Mandriva Enterprise Server 5.2 was used for the Load Balancers and the Web servers while the Linux Virtual server OS and Red Hat 9.0 were installed on the file servers and the cluster administration respectively
vi. Network cables and RJ45
vii. An Ethernet switch was deployed for connecting the 10 nodes
viii. 3 monitors for each level of the architectures
ix. LAN card on each of the node
x. The application software is a Simulated VoIP application developed by C.C. Madu and C. C. Okoro at the Software Laboratory, NAU, Nigeria.

The Prototyping methodology is adopted in this work whereby a prototype cluster is built using the above materials. The computers were enumerated and sorted to see if any of them need a part replacement or minor repairs, then the architectural design of the cluster was

drafted and tested for high performance. After this, the cluster was implemented and tested with the VoIP software and the documentation of the design was done. It is the believe of the author that with the successful implementation of this prototype cluster using 10 computers, bigger clusters can be built to provide the needed processing powers for computational intensive research that require high performance systems.

4. Results and Discussions

The architectural design of the cluster and nodes arrangements is as illustrated in Figure 1 below. The nine PCs and one laptop were split into four architectural levels: the laptop computer was designated the cluster supervisor. It was LAN-enabled and designed to manage the entire systems.

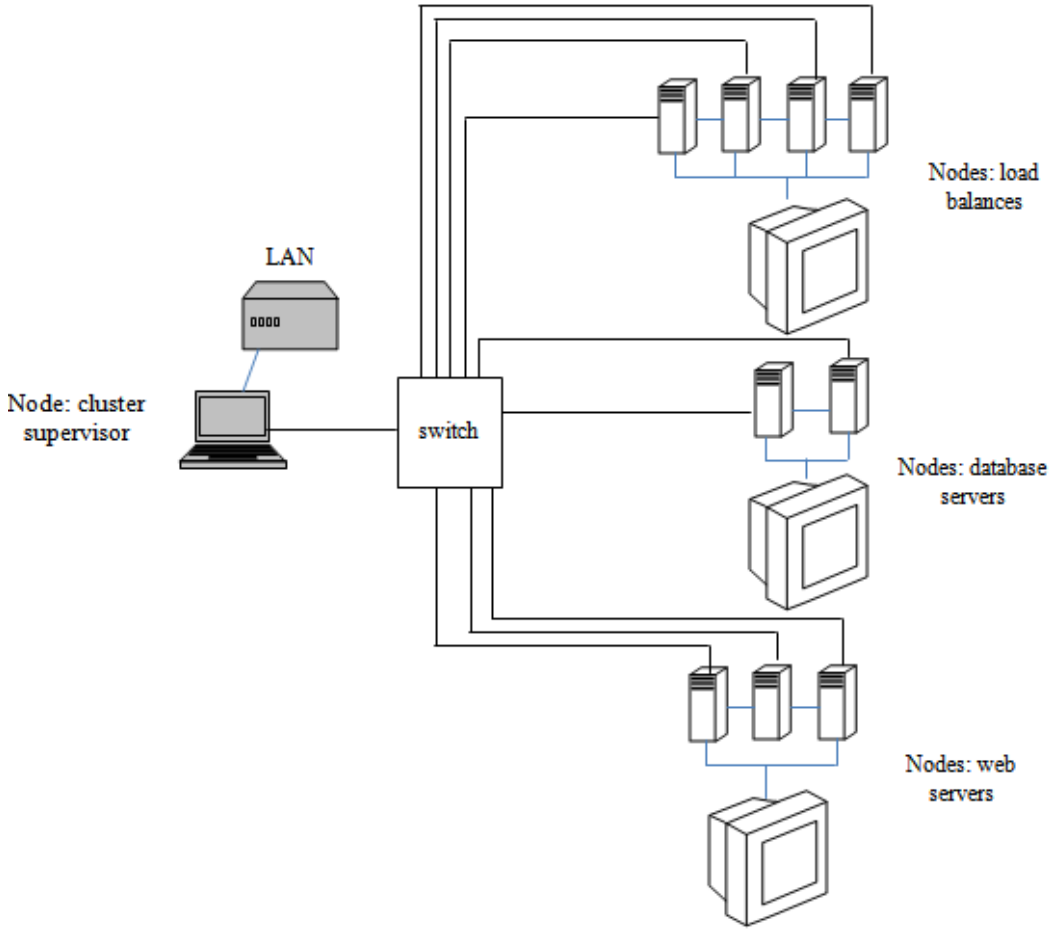

Figure 1. Architectural Design and Nodes arrangement of the cluster

Four of the PCs were designated load balancers to help distribute the loads among the web servers and the database servers where appropriate in order to prevent failovers. The database servers were implemented using two PCs while the remaining three PCs were deployed to provide web services in the cluster implementation. The load balancers are configured such that only one of the PCs operate at a time and if the current one fails, the architecture has been programmed to re-distribute the loads and have one of the remaining three take over. In addition, all the load balancers share the same IP addresses but only one is active at a given time, hence no conflict. The database servers comprise of two PCs configured to replicate data in a peer-to-peer protocol and the remaining three PCs are connected in parallel and designated web servers; they also host the VoIP simulation system used in testing the stability and feasibility of the system. Finally, the three divisions in the architecture are inter-connected via a switch and each division is connected to a monitor to enable them function as a complete unit. During the VoIP simulation, removing any of the PCs from each of the levels does not lead to the failure of the entire cluster showing high performance and high reliability.

5. Conclusions and Recommendations

This research had served dual purposes: using discarded obsolete computers, institution can obtain some extra computing powers and eliminate e-Wastes through leveraging on freely available open source software that can be scalable. This system if implemented on a larger scale will constitute substantial cost-saving as institutions will not have to keep on purchasing new computer systems out of desire for systems upgrade.

Further research is recommended to obtain an empirical figure of savings in time, costs, energy and environmental protection issues.

References

[1] Fela, J. (2010), "Developing countries face e-waste crisis". Frontiers in Ecology and the Environment 8 (3): 117.

[2] Walunj, A. K. (2013), Hazardous Electronic Waste (E-Waste) Management Issues and Impacts on Environment and Human Health in India. Proceedings of the National Conference on Hazardous e-waste management, University of Pune, India. December 23-24.

[3] Joshi, A. (2013), e-waste is gold unsold. Invited paper, National Conference on Hazardous e-waste management, University of Pune, India. December 23-24.

[4] Shinde B. S., Dhembare A. J., Pondhe G. M. (2013), Study of Environmental Impact of Electronic Waste and Reuse. National Conference on Hazardous e-waste management, University of Pune, India. December 23-24.

[5] Position paper by Camara Education, "How we re-use your computers". Ireland. http://camara.org/give-computers/give-computers-ireland/how-we-reuse-computer/

[6] Clark, C. T. (2010), Building a High Performance Cluster through Computer Reuse A Major Qualifying Project Report submitted to the Faculty of the Worcester Polytechnic Institute.

[7] Flemming, C., Urness, T., Bohorquez, M (2009), Using recycled computers to construct a Beowulf cluster for molecular modeling. Proceedings of the 42nd Annual Midwest Instruction and Computing Symposium (MICS 2009).